REMOVAL

1. REMOVE V-BANK COVER SUB-ASSEMBLY (See page EM-28)
2. REMOVE FRONT WHEEL RH
3. REMOVE NO. 1 ENGINE UNDER COVER (See page EM-26)
4. REMOVE FRONT FENDER APRON SEAL RH (See page EM-26)
5. DRAIN ENGINE COOLANT (See page CO-6)
6. REMOVE NO. 2 AIR CLEANER INLET (See page EM-28)
7. REMOVE BATTERY (See page EM-26)
8. REMOVE FRONT BUMPER ASSEMBLY (See page ET-3)
9. REMOVE FRONT BUMPER ENERGY ABSORBER
10. REMOVE NO. 1 AIR CLEANER INLET (See page EM-28)
11. DISCONNECT RADIATOR RESERVE TANK HOSE OR PIPE (See page CO-28)
12. DISCONNECT NO. 1 RADIATOR HOSE (See page CO-28)
13. DISCONNECT NO. 2 RADIATOR HOSE (See page CO-29)
14. REMOVE HOOD LOCK RELEASE LEVER PROTECTOR (See page CO-29)
15. REMOVE HOOD LOCK ASSEMBLY (See page CO-29)
16. REMOVE HOOD LOCK SUPPORT SUB-ASSEMBLY (See page CO-29)
17. DISCONNECT COOLING FAN ECU CONNECTOR (See page CO-30)
18. REMOVE RADIATOR UPPER SUPPORT SUB-ASSEMBLY (See page CO-30)
19. DISCONNECT NO. 2 OIL COOLER OUTLET TUBE SUB-ASSEMBLY (See page CO-31)
20. REMOVE HEADLIGHT ASSEMBLY RH (See page LI-69)
21. REMOVE RADIATOR SIDE DEFLECTOR RH (See page CO-31)
22. REMOVE HEADLIGHT BRACKET RH (See page CO-32)
23. REMOVE PRESSURE FEED TUBE ASSEMBLY (See page CO-32)

24. **REMOVE RADIATOR SUPPORT CUSHION (See page CO-32)**

25. **REMOVE NO. 1 RADIATOR SUPPORT (See page CO-32)**

26. **REMOVE RADIATOR ASSEMBLY WITH FAN SHROUD AND FAN MOTOR (See page CO-33)**

27. **REMOVE V-RIBBED BELT (See page EM-6)**

28. **REMOVE GENERATOR ASSEMBLY**

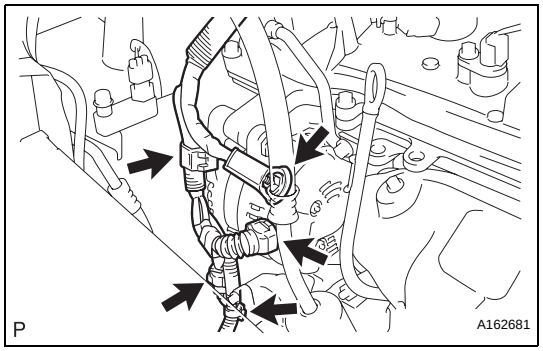

(a) Remove the terminal cap.
(b) Remove the nut and disconnect the wire harness from terminal B.
(c) Disconnect the generator connector from the generator assembly.
(d) Disconnect the connector from the compressor and magnetic clutch.
(e) Disconnect the 2 wire harness clamps.

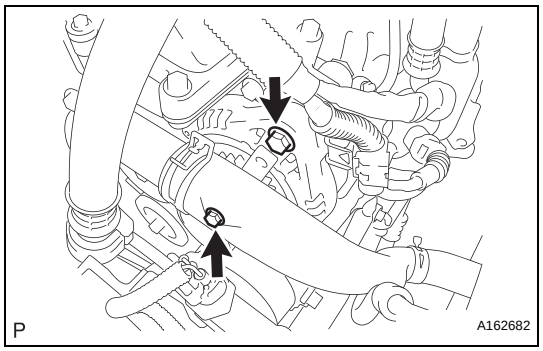

(f) Remove the 2 bolts.

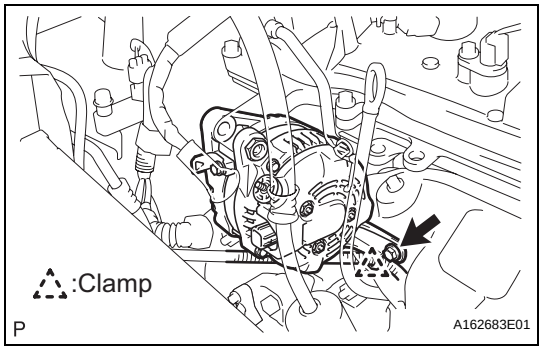

(g) Remove the bolt from the cylinder block.
(h) Disconnect the wire harness clamp and remove the generator assembly.

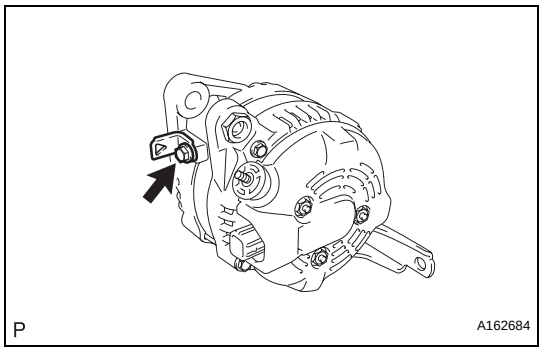

(i) Remove the bolt and wire harness clamp stay.

CH

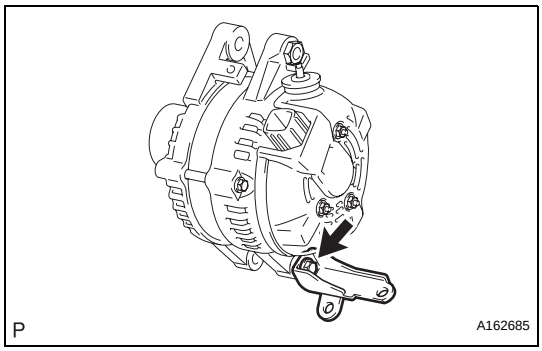

(j) Remove the bolt and bracket.

DISASSEMBLY

1. REMOVE GENERATOR CLUTCH PULLEY

(a) Using a screwdriver, remove the generator pulley cap.

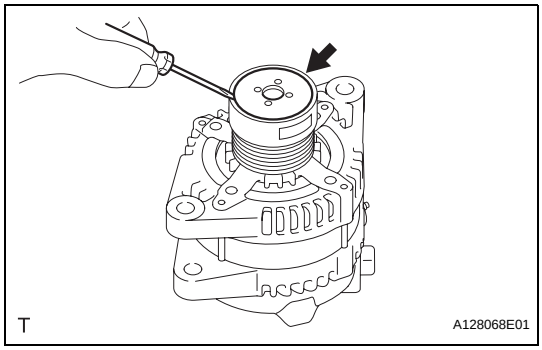

(b) Set SST (A) and (B).
SST 09820-63020

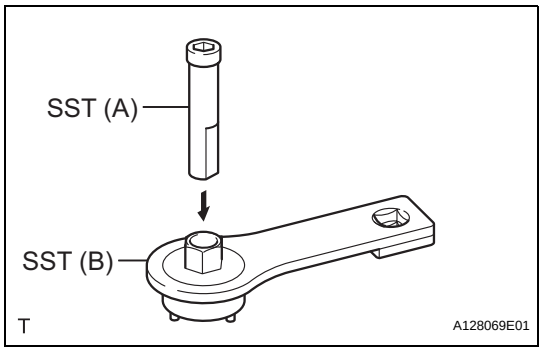

(c) Clamp SST (A) in a vise.
NOTICE:
Be sure to fix the flat surface of SST (A) in a vise.

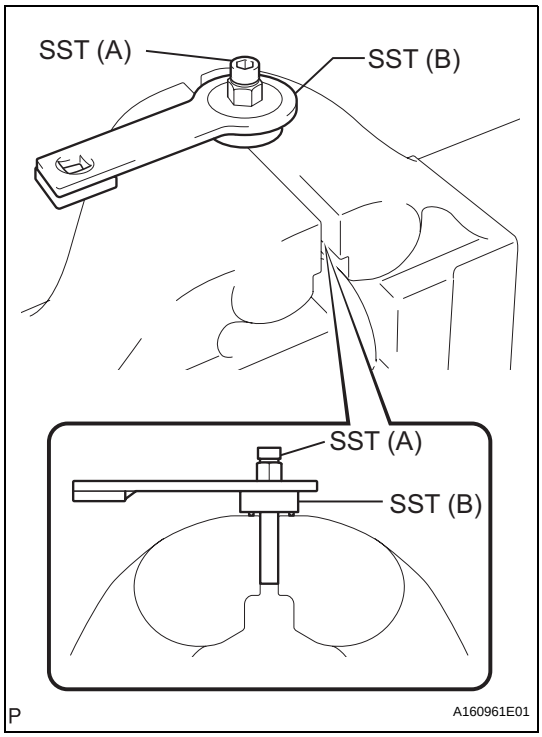

CH

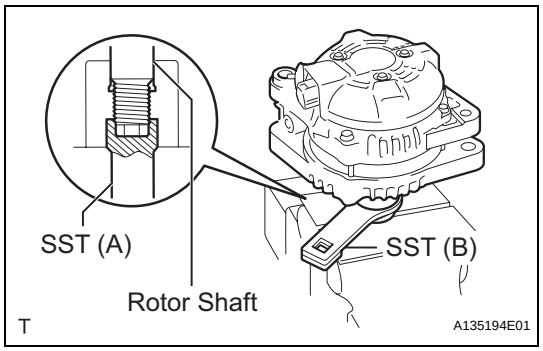

(d) Place the rotor shaft end into SST (A).

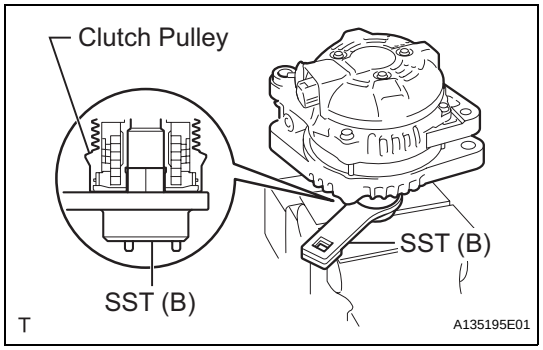

(e) Fit SST (B) to the clutch pulley.

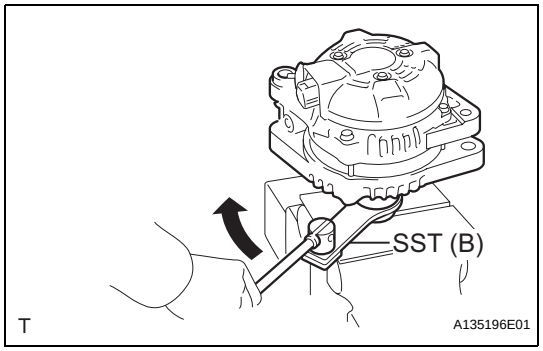

(f) Loosen the pulley by turning SST (B) in the direction shown in the illustration.
NOTICE:
Hold the generator assembly tightly.
(g) Remove the generator assembly from SST.
(h) Remove the clutch pulley from the rotor shaft.

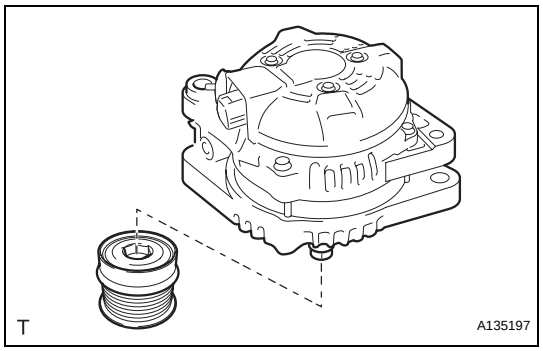

2. REMOVE GENERATOR REAR END COVER

(a) Place the generator assembly on the clutch pulley.

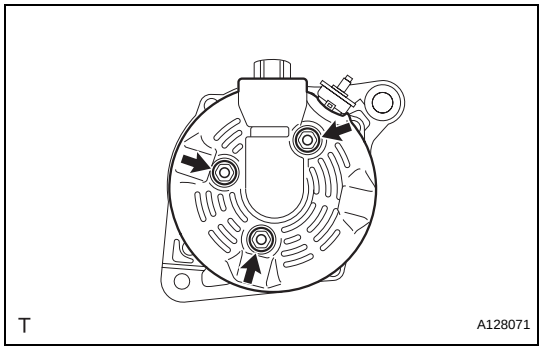

(b) Remove the 3 nuts and generator rear end cover.

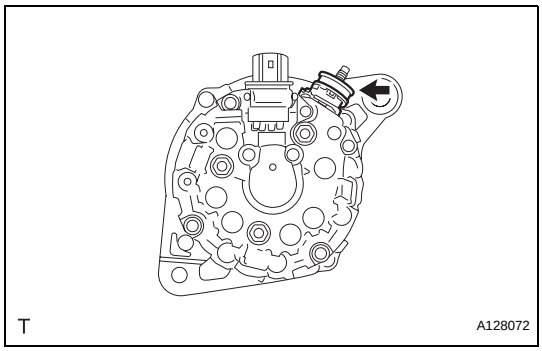

3. REMOVE GENERATOR TERMINAL INSULATOR

(a) Remove the terminal insulator from the generator coil.

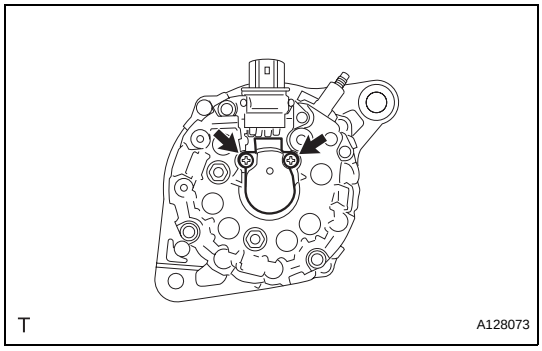

4. REMOVE GENERATOR BRUSH HOLDER ASSEMBLY

(a) Remove the 2 screws and brush holder from the generator coil.

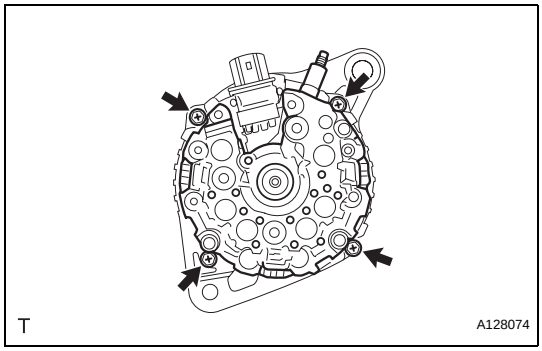

5. REMOVE GENERATOR COIL ASSEMBLY

(a) Remove the 4 bolts.

(b) Using SST, remove the generator coil assembly.

SST 09950-40011 (09951-04020, 09952-04010, 09953-04020, 09954-04010, 09955-04071, 09957-04010, 09958-04011)

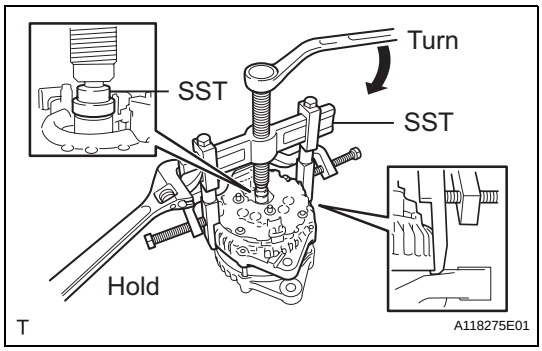

6. REMOVE GENERATOR ROTOR ASSEMBLY

(a) Remove the generator washer.

