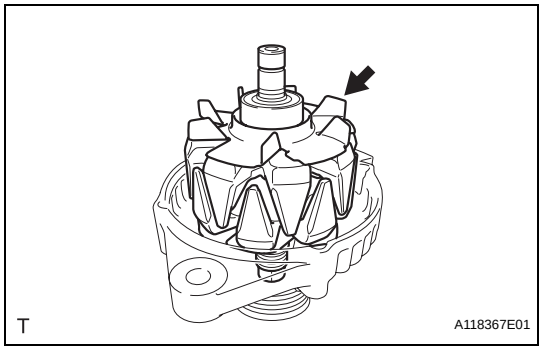

(b) Remove the generator rotor assembly.

INSPECTION

1. INSPECT GENERATOR CLUTCH PULLEY

(a) Hold the center of the pulley, and confirm that the outer ring turns counterclockwise and does not turn clockwise.
If the result is not as specified, replace the clutch pulley.

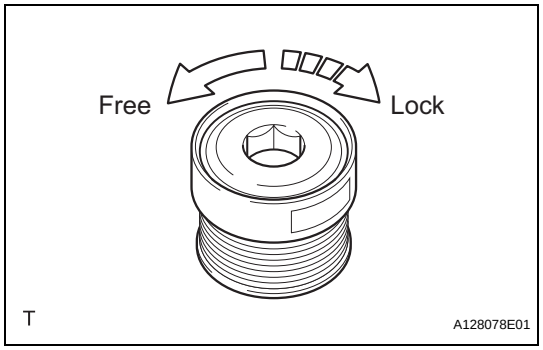

2. REMOVE GENERATOR DRIVE END FRAME BEARING

(a) Check that the bearing is not rough or worn.
OK:
The bearing rotates smoothly.
If the bearing does not rotate smoothly, replace the bearing.

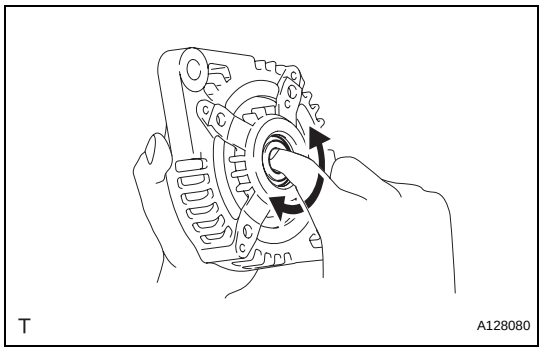

CH

3. INSPECT GENERATOR BRUSH HOLDER ASSEMBLY

(a) Using vernier calipers, measure the length of the exposed brushes.
Standard exposed length:
9.5 to 11.5 mm (0.374 to 0.453 in.)
Minimum exposed length:
4.5 mm (0.177 in.)
If the exposed length is less than the minimum, replace the brush holder assembly.

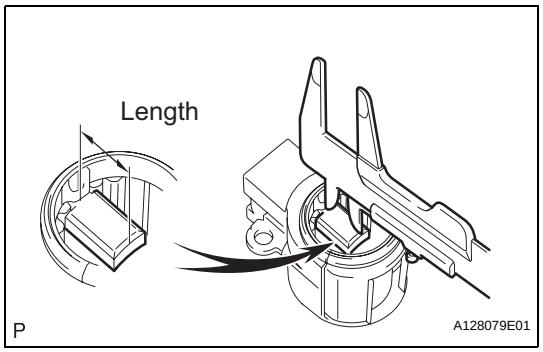

4. INSPECT GENERATOR ROTOR ASSEMBLY

(a) Check that the generator rotor bearing is not rough or worn.
If necessary, replace the generator rotor assembly.

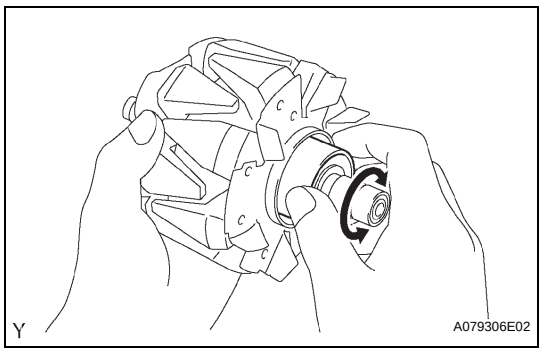

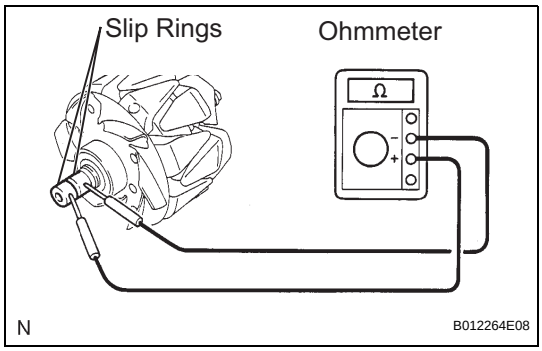

(b) Check the generator rotor for an open circuit.
(1) Using an ohmmeter, measure the resistance between the slip rings.
Standard resistance

Condition	Specified Condition
Approx. 20°C (68°F)	1.5 to 1.9 Ω

If the result is not as specified, replace the generator rotor assembly.

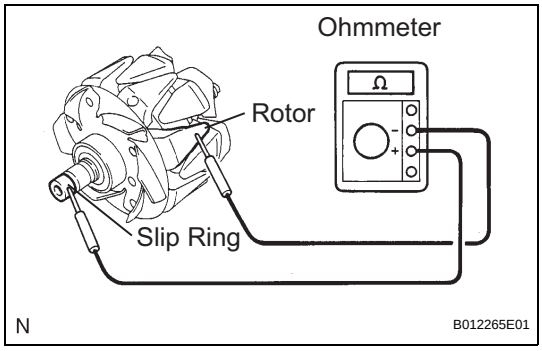

(c) Check the rotor for a short to ground.
(1) Using an ohmmeter, measure the resistance between the slip ring and rotor.
Standard resistance

Tester Condition	Specified Condition
Slip ring - Rotor	1 MΩ or higher

If the result is not as specified, replace the generator rotor assembly.

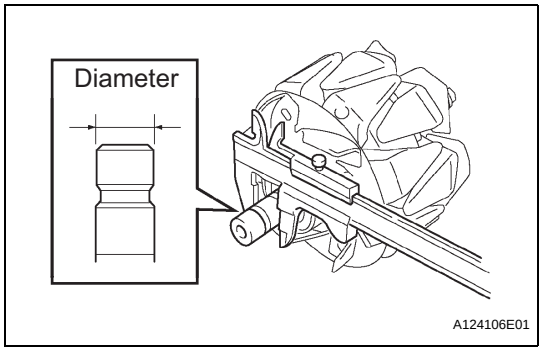

(d) Using vernier calipers, measure the slip ring diameter.
Standard diameter:
14.2 to 14.4 mm (0.559 to 0.567 in.)
Minimum diameter:
14.0 mm (0.551 in.)
If the diameter is less than the minimum, replace the generator rotor assembly.

CH

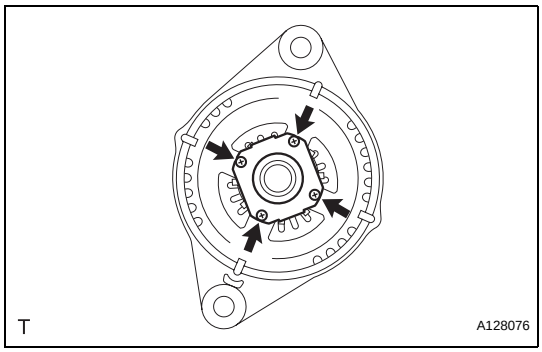

REPLACEMENT

1. REPLACE GENERATOR DRIVE END FRAME BEARING

(a) Remove the 4 screws and retainer plate from the drive end frame.

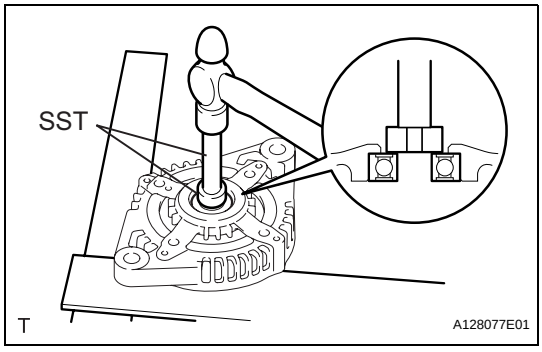

(b) Using SST and a hammer, tap out the drive end frame bearing from the drive end frame.
SST 09950-60010 (09951-00250), 09950-70010 (09951-07100)

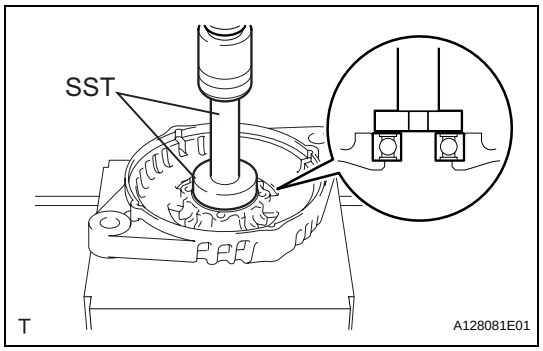

(c) Using SST and a press, press in a new generator drive end frame bearing.
SST 09950-60010 (09951-00470), 09950-70010 (09951-07100)

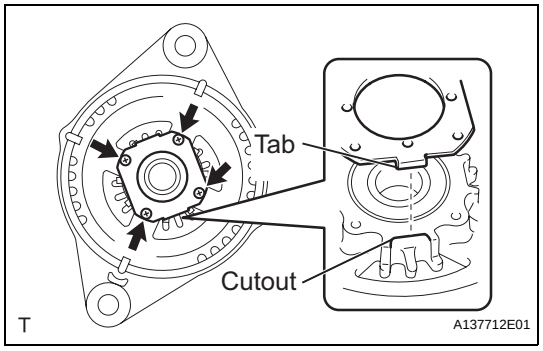

(d) Fit the tabs on the retainer plate into the cutouts on the drive end frame to install the retainer plate.
(e) Install the 4 screws.
Torque: 2.3 N*m (23 kgf*cm, 20 in.*lbf)