DTC	P0796	Pressure Control Solenoid "C" Performance (Shift Solenoid Valve SL3)

SYSTEM DESCRIPTION

The ECM uses signals from the vehicle speed sensor to detect the actual gear position (1st, 2nd, 3rd, 4th or 5th gear).
Then the ECM compares the actual gear with the shift schedule in the ECM memory to detect mechanical troubles of the shift solenoid valves and valve body.

DTC No.	DTC Detection Condition	Trouble Area
P0796	The gear required by the ECM does not match the actual gear when driving (2-trip detection logic)	• Shift solenoid valve SL3 remains open or closed • Valve body is blocked • Automatic transaxle (clutch, brake or gear etc.)

MONITOR DESCRIPTION

The ECM commands gear shifts by turning the shift solenoid valves "ON/OFF". According to the input shaft revolution, intermediate (counter) shaft revolution and output shaft revolution, the ECM detects the actual gear position (1st, 2nd, 3rd, 4th or 5th gear position). When the gear position commanded by the ECM and the actual gear position are not the same, the ECM illuminates the MIL and stores the DTC.

MONITOR STRATEGY

Related DTCs	P0796: Shift solenoid valve SL3/OFF malfunction Shift solenoid valve SL3/ON malfunction
Required sensors/Components	Shift solenoid valve SL3, Speed sensor (NT), Speed sensor (NC), Crankshaft position sensor (NE)
Frequency of operation	Continuous
Duration	OFF malfunction (A) 0.8 sec. OFF malfunction (B) 1 sec. ON malfunction (A) and (B) 0.8 sec. ON malfunction (C) 0.4 sec.
MIL operation	2 driving cycles
Sequence of operation	None

AX

TYPICAL ENABLING CONDITIONS

All:

The monitor will run whenever this DTC is not present.	P0115 - P0118 (ECT sensor) P0125 (Insufficient ECT for closed loop) P0500 (VSS) P0748, P0778, P0798 (Shift solenoid valve (range))
ECT (Engine coolant temperature)	10°C (50°F) or more
Transmission range	"D"
TFT (Transmission fluid temperature)	-20°C (-4°F) or more
TFT sensor circuit	Not circuit malfunction
ECT sensor circuit	Not circuit malfunction
Turbine speed sensor circuit	Not circuit malfunction
Intermediate shaft speed sensor circuit	Not circuit malfunction
Output speed sensor circuit	Not circuit malfunction
Shift solenoid valve SL1 circuit	Not circuit malfunction
Shift solenoid valve SL2 circuit	Not circuit malfunction

Shift solenoid valve SL3 circuit	Not circuit malfunction
Shift solenoid valve S4 circuit	Not circuit malfunction
Shift solenoid valve SR circuit	Not circuit malfunction
Shift solenoid valve DSL circuit	Not circuit malfunction
Electronic throttle system	Not circuit malfunction

OFF malfunction (A):

ECM selected gear	4th or 5th
Throttle valve opening angle	4.5% or more at engine speed 1,900 rpm (Varies with engine speed)

OFF malfunction (B):

ECM selected gear	4th
Throttle valve opening angle	5% or more
Vehicle speed	10 km/h (6.2 mph) or more

ON malfunction (A):

ECM selected gear	1st
Vehicle speed	Less than 40 km/h (24.9 mph)
Throttle valve opening angle	4.5% or more at engine speed 1,900 rpm (Varies with engine speed)

ON malfunction (B):

ECM selected gear	3rd
Throttle valve opening angle	5.0% or more at output speed 1,400 rpm (Varies with engine speed)
Malfunction of pressure control solenoid "B" (SL2) and "C" (SL3)	Not detected

ON malfunction (C):

Throttle valve opening angle	7.0% or more at output speed 1,050 rpm (Varies with engine speed)
Malfunction of pressure control solenoid "B" (SL2)	Not detected

AX

TYPICAL MALFUNCTION THRESHOLDS

Either of the following conditions is met: OFF malfunction (A) and (B), or ON malfunctions (A), (B) and (C)

2 detections are necessary per driving cycle:

1st detection; temporary flag ON

2nd detection; pending fault code ON

OFF malfunction (A):

Input (turbine) speed/Intermediate shaft speed	0.93 to 1.07

OFF malfunction (B):

Intermediate shaft speed/Output speed	1.02 to 1.16

ON malfunction (A):

Input (turbine) speed/Intermediate shaft speed	0.93 to 1.07

ON malfunction (B):

Input (turbine) speed - Intermediate shaft speed	700 rpm or more

ON malfunction (C):

Input (turbine) speed - Intermediate shaft speed	Less than -500 rpm or 700 rpm or more

INSPECTION PROCEDURE

HINT:
Using the intelligent tester to perform ACTIVE TEST allows relays, VSVs, actuators and other items to be operated without removing any parts. This non-intrusive functional inspection can be very useful because intermittent operation may be discovered before parts or wiring is disturbed. Performing ACTIVE TEST early in troubleshooting is one way to save diagnostic time. DATA LIST information can be displayed while performing ACTIVE TEST.

1. PERFORM ACTIVE TEST

(a) Warm up the engine.
(b) Turn the ignition switch off.
(c) Connect the intelligent tester together with the CAN VIM (controller area network vehicle interface module) to the DLC3.
(d) Turn the ignition switch to the ON position.
(e) Turn on the tester.
(f) Select the item "DIAGNOSIS / ENHANCED OBD II / ACTIVE TEST / SHIFT".
(g) According to the display on the tester, perform the "ACTIVE TEST".

HINT:
While driving, the shift position can be forcibly changed with the intelligent tester.
Comparing the shift position commanded by the ACTIVE TEST with the actual shift position enables you to confirm the problem (See page AX-30).

Tester Display	Test Part	Control Range	Diagnostic Note
SHIFT	[Test Details] Operate the shift solenoid valve and set the each shift position by yourself. [Vehicle Condition] • IDL: ON • Less than 50 km/h (31 mph) [Others] • Press "→" button: Shift up • Press "←" button: Shift down	1st/2nd/3rd/4th/5th	Possible to check the operation of the shift solenoid valves.

HINT:
- This test can be conducted when the vehicle speed is 50 km/h (31 mph) or less.
- The shift position commanded by the ECM is shown in the DATA LIST/SHIFT display on the intelligent tester.

AX

1	CHECK OTHER DTCS OUTPUT (IN ADDITION TO DTC P0796)

(a) Connect the intelligent tester together with the CAN VIM (controller area network vehicle interface module) to the DLC3.
(b) Turn the ignition switch to the ON position and turn the OBD II scan tool or the intelligent tester main switch ON.
(c) When you use intelligent tester:
Select the item "DIAGNOSIS / ENHANCED OBD II / DTC INFO / CURRENT CODES".
(d) Read the DTCs using the OBD II scan tool or the intelligent tester.

Result

Result	Proceed to
P0796	A
P0796 and other DTCs	B

HINT:
If any other codes besides "P0796" are output, perform the troubleshooting for those DTCs first.

B → GO TO DTC CHART

A

2 INSPECT SHIFT SOLENOID VALVE SL3

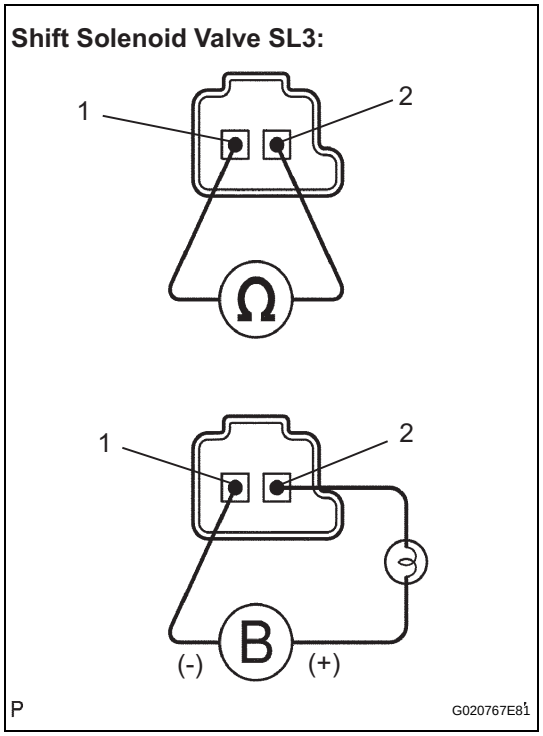

(a) Remove the shift solenoid valve SL3.
(b) Measure the resistance according to the value(s) in the table below.
Standard resistance

Tester Connection	Specified Condition 20°C (68°F)
1 - 2	5.0 to 5.6 Ω

(c) Connect the positive (+) lead with a 21 W bulb to terminal 2 and the negative (-) lead to terminal 1 of the solenoid valve connector, then check the movement of the valve.
OK:
The solenoid makes an operating sound.

NG → REPLACE SHIFT SOLENOID VALVE SL3

OK

AX

3 INSPECT TRANSMISSION VALVE BODY ASSEMBLY

OK:
There are no foreign objects on each valve and they operate smoothly.

NG → REPAIR OR REPLACE TRANSMISSION VALVE BODY ASSEMBLY

OK

4 INSPECT TORQUE CONVERTER CLUTCH ASSEMBLY

OK:
The torque converter clutch operates normally.

NG → REPLACE TORQUE CONVERTER CLUTCH ASSEMBLY

OK

REPAIR OR REPLACE AUTOMATIC TRANSAXLE ASSEMBLY