DTC	P0705	Transmission Range Sensor Circuit Malfunction (PRNDL Input)

DESCRIPTION

The park/neutral position switch detects the shift lever position and sends signals to the ECM.

DTC No.	DTC Detection Condition	Trouble Area
P0705	(A) Any 2 or more signals of the following are ON simultaneously (2-trip detection logic) • P input signal is ON. • N input signal is ON. • R input signal is ON. • D input signal is ON. • 3 input signal is ON. • 2 input signal is ON. (B) Any 2 or more signals of the following are ON simultaneously (2-trip detection logic) • NSW (STAR) input signal is ON. • R input signal is ON. • D input signal is ON. • 3 input signal is ON. • 2 input signal is ON. (C) All switches are OFF simultaneously for NSW (STAR), P, R, N, D, 3, 2 positions (2-trip detection logic). (D) Both 1 and 2 conditions are met (2-trip detection logic) 1. One of the following conditions are met (a) NSW (STAR) input signal is ON. (b) P input signal is ON. (c) N input signal is ON. (d) R input signal is ON. 2. One of the following conditions are met (a) 4 input signal is ON. (b) L input signal is ON.	• Short in park/neutral position switch circuit • Park/neutral position switch • ECM

MONITOR DESCRIPTION

These DTCs indicate a problem with the park/neutral position switch and the wire harness in the park/neutral position switch circuit.
The park/neutral position switch detects the shift lever position and sends a signal to the ECM.
For security, the park/neutral position switch detects the shift lever position so that engine can be started only when the shift lever is in the P or N position
The park/neutral position switch sends a signal to the ECM according to the shift position (P, R, N or D).
The ECM determines that there is a problem with the switch or related parts if in receives more than 1 position signal simultaneously. The ECM will turn on the MIL and store the DTC.

AX

MONITOR STRATEGY

Related DTCs	P0705: Park/neutral position switch/Verify switch input
Required sensors/Components	Park/neutral position switch
Frequency of operation	Continuous
Duration	Condition (A), (B), (D) 2 sec. Condition (C) 60 sec.
MIL operation	2 driving cycles
Sequence of operation	None

TYPICAL ENABLING CONDITIONS

All:

The monitor will run whenever this DTC is not present.	None
Ignition switch	ON
Battery voltage	10.5 V or more

TYPICAL MALFUNCTION THRESHOLDS

1. One of the following conditions are met: Condition (A), (B), (C) and (D)

Condition (A):

Number of the following signal input at the same time	2 or more
P switch	ON
N switch	ON
R switch	ON
D switch	ON
3 switch	ON
2 switch	ON

Condition (B):

Number of the following signal input at the same time	2 or more
NSW (STAR) switch	ON
R switch	ON
D switch	ON
3 switch	ON
2 switch	ON

Condition (C):

NSW (STAR) switch	OFF
P switch	OFF
N switch	OFF
R switch	OFF
D switch	OFF
3 switch	OFF
2 switch	OFF

AX

Condition (D):

Both of the following conditions (1) or (2) are met:

(1) One of the following conditions are met	-
NSW (STAR) switch	ON
P switch	ON
R switch	ON
N switch	ON
(2) One of the following conditions are met	-
4 shift position switch	ON
L shift position switch	ON

COMPONENT OPERATING RANGE

Park/neutral Position switch	The park/neutral position switch sends only one signal to the ECM.

WIRING DIAGRAM

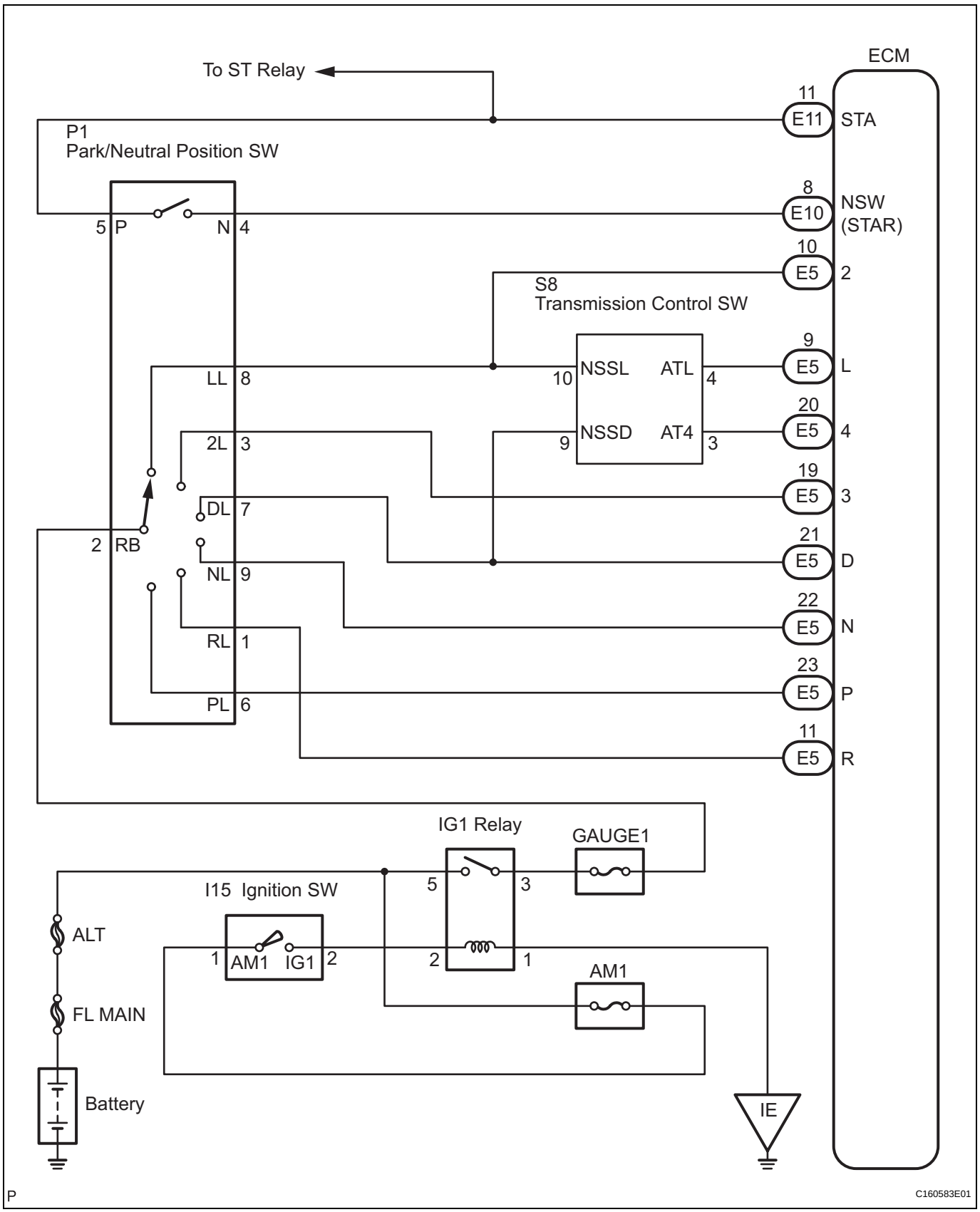

AX

INSPECTION PROCEDURE

1 INSPECT PARK/NEUTRAL POSITION SWITCH ASSEMBLY

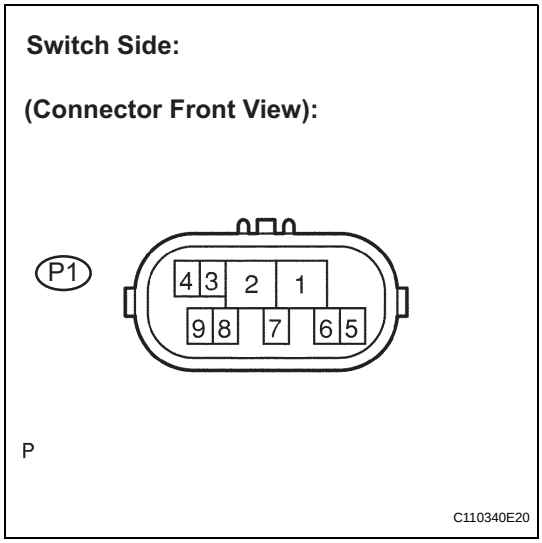

(a) Disconnect the park/neutral position switch connector.
(b) Measure resistance according to the value(s) in the table below when the shift lever is moved to each position.
Standard resistance

Shift Position	Tester Connection	Specified Condition
P	2 - 6 and 4 - 5	Below 1 Ω
Except P		10 kΩ or higher
R	2 - 1	Below 1 Ω
Except R		10 kΩ or higher
N	2 - 9 and 4 - 5	Below 1 Ω
Except N		10 kΩ or higher
D and 4	2 - 7	Below 1 Ω
Except D and 4		10 kΩ or higher
3	2 - 3	Below 1 Ω
Except 3		10 kΩ or higher
2 and L	2 - 8	Below 1 Ω
Except 2 and L		10 kΩ or higher

NG → **REPLACE PARK/NEUTRAL POSITION SWITCH ASSEMBLY**

OK

2 INSPECT SHIFT LOCK CONTROL UNIT ASSEMBLY

AX

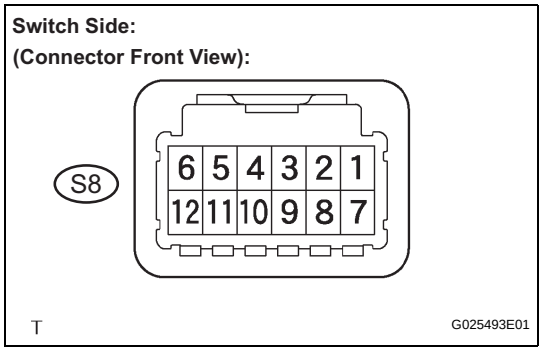

(a) Connect the park/neutral position switch connector.
(b) Disconnect the transmission control switch connector of shift lock control unit assembly.
(c) Measure resistance according to the value(s) in the table below when the shift lever is moved to each position.
Standard resistance

Shift Position	Tester Connection	Specified Condition
D	2 - 9	Below 1 Ω
4	↑	10 kΩ or higher
D	3 - 9	10 kΩ or higher
4	↑	Below 1 Ω
2	5 - 10	Below 1 Ω
L	↑	10 kΩ or higher
2	4 - 10	10 kΩ or higher
L	↑	Below 1 Ω

NG → **REPLACE SHIFT LOCK CONTROL UNIT ASSEMBLY**

OK

3	CHECK HARNESS AND CONNECTOR (PARK/NEUTRAL POSITION SWITCH - ECM)

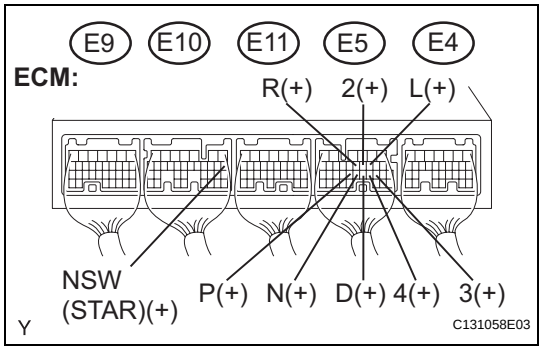

(a) Connect the transmission control switch connector of shift lock control unit assembly.
(b) Turn the ignition switch to the ON position, and measure the voltage according to the value(s) in the table below when the shift lever is moved to each position.

Standard voltage

Shift Position	Tester Connection	Specified Condition
P and N	E10-8 (NSW (STAR)) - Body ground	Below 1 V
Except P and N		11 to 14 V
P	E5-23 (P) - Body ground	11 to 14 V
Except P		Below 1 V
N	E5-22 (N) - Body ground	11 to 14 V
Except N		Below 1 V
R	E5-11 (R) - Body ground	11 to 14 V*
Except R		Below 1 V
D and 4	E5-21 (D) - Body ground	11 to 14 V
Except D and 4		Below 1 V
4	E5-20 (4) - Body ground	11 to 14 V
Except 4		Below 1 V
3	E5-19 (3) - Body ground	11 to 14 V
Except 3		Below 1 V
2 and L	E5-10 (2) - Body ground	11 to 14 V
Except 2 and L		Below 1 V
L	E5-9 (L) - Body ground	11 to 14 V
Except L		Below 1 V

HINT:

*: The voltage will drop slightly due to lighting up of the back up light.

NG → **REPAIR OR REPLACE HARNESS OR CONNECTOR**

OK

REPLACE ECM

AX