PARK / NEUTRAL POSITION SWITCH

COMPONENTS

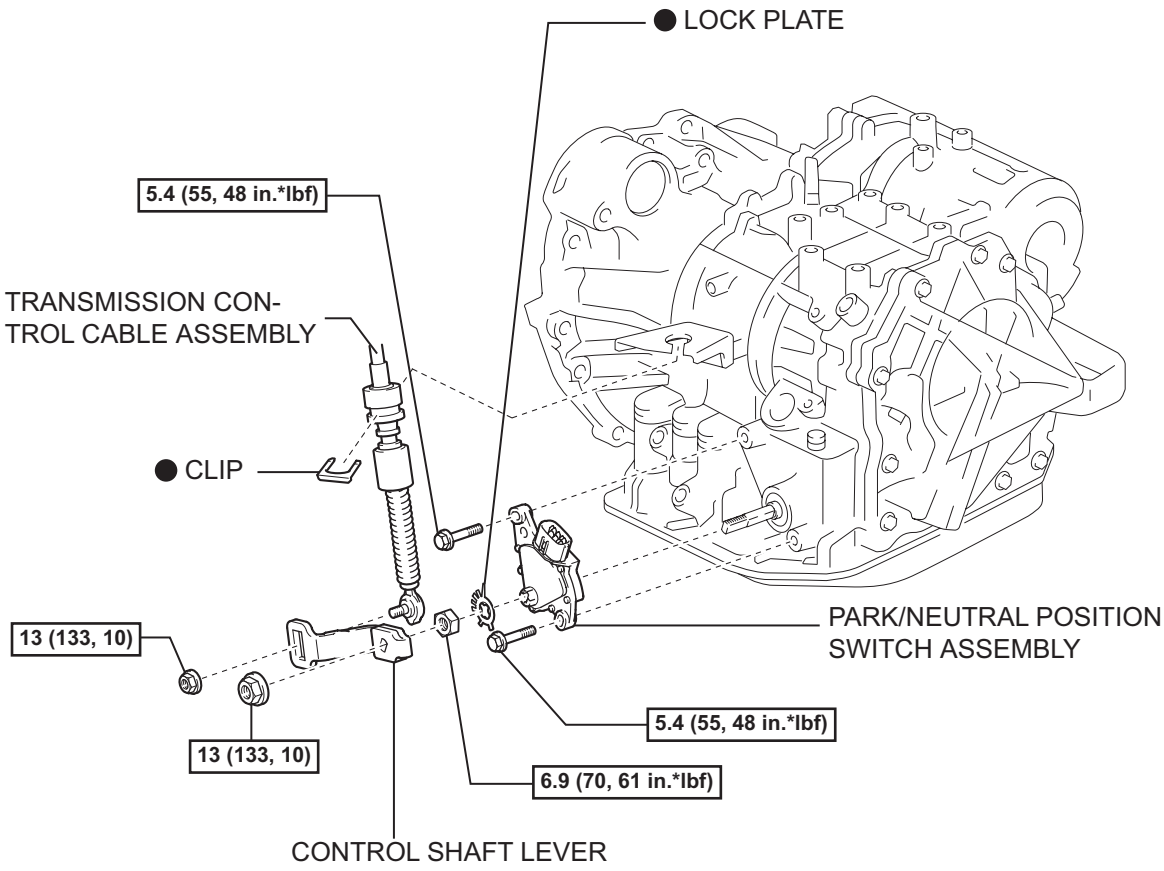

● Non-reusable part

N*m (kgf*cm, ft.*lbf) : Specified torque

P

C126420E01

REMOVAL

1. REMOVE BATTERY

2. REMOVE AIR CLEANER ASSEMBLY

HINT:

(See page EM-26)

3. SEPARATE TRANSMISSION CONTROL CABLE ASSEMBLY

(a) Remove the nut from the control shaft lever.

(b) Disconnect the control cable from the control shaft lever.

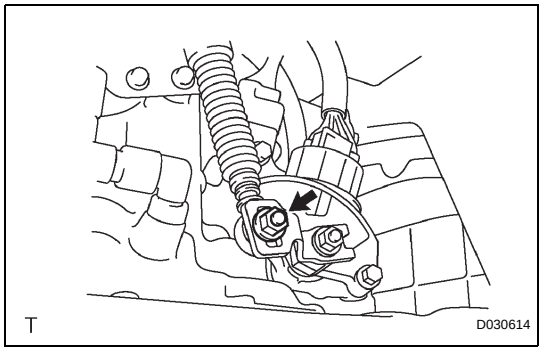

(c) Remove the clip and disconnect the control cable from the control cable bracket.

NOTICE:

Do not hold the resin guide pipe.

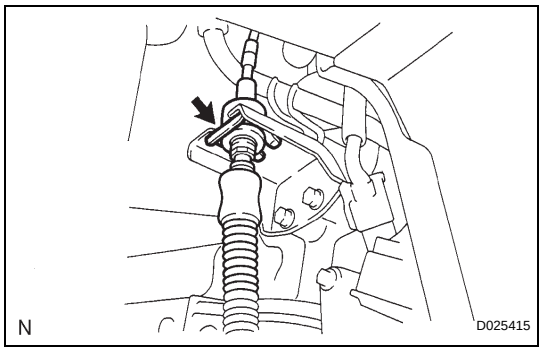

4. REMOVE PARK/NEUTRAL POSITION SWITCH ASSEMBLY

(a) Disconnect the park/neutral position switch connector.

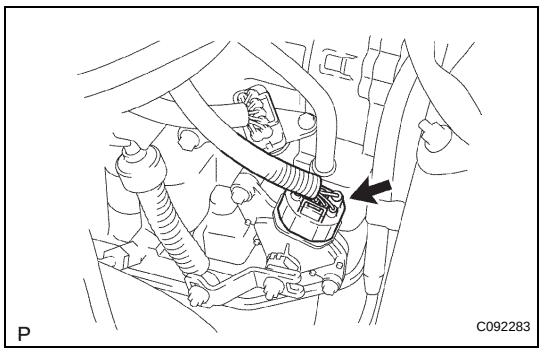

(b) Remove the nut, washer and control shaft lever.

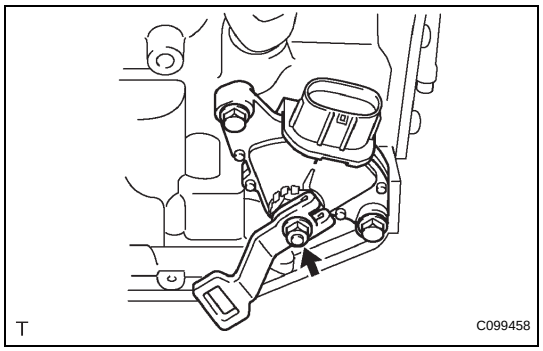

AX

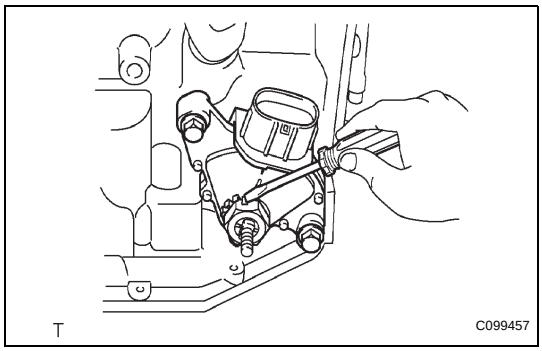

(c) Using a screwdriver, pry up the lock plate.

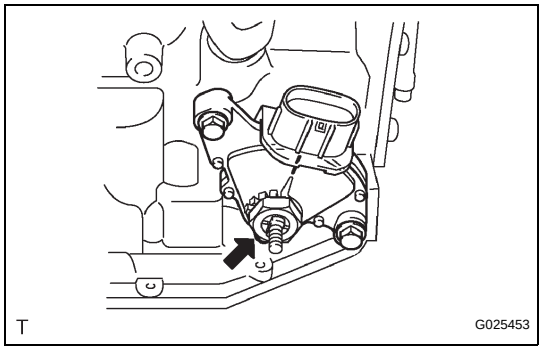

(d) Remove the lock nut and the lock plate.

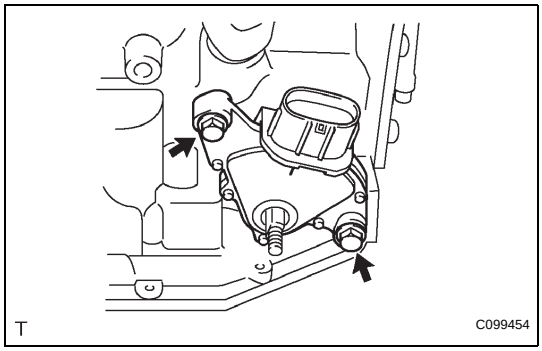

(e) Remove the 2 bolts and pull out the park/neutral position switch.