TRANSMISSION WIRE

COMPONENTS

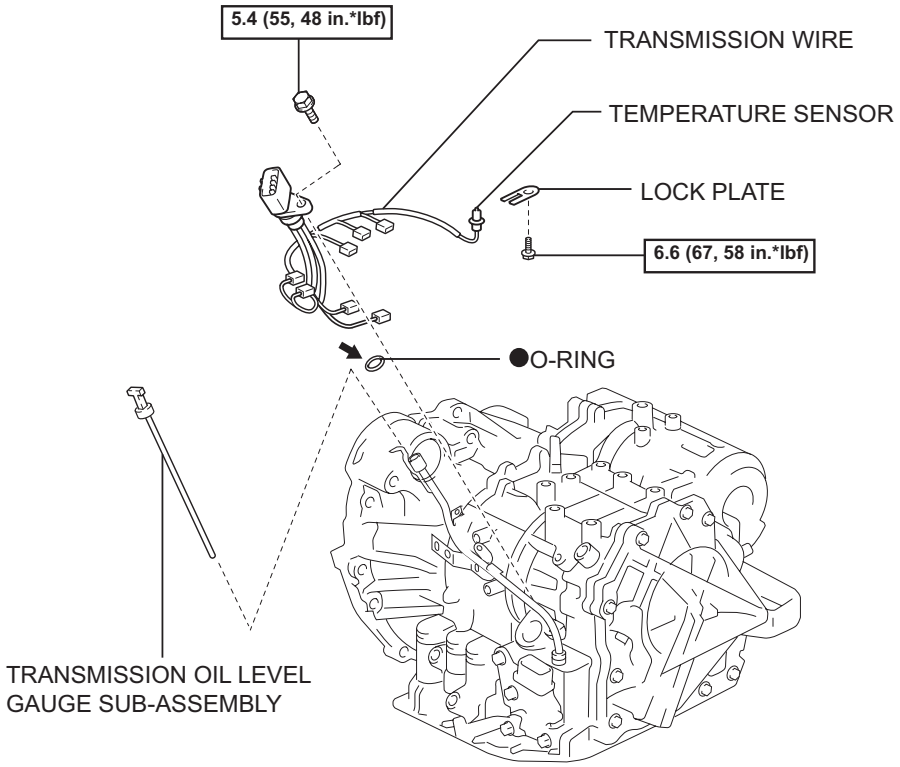

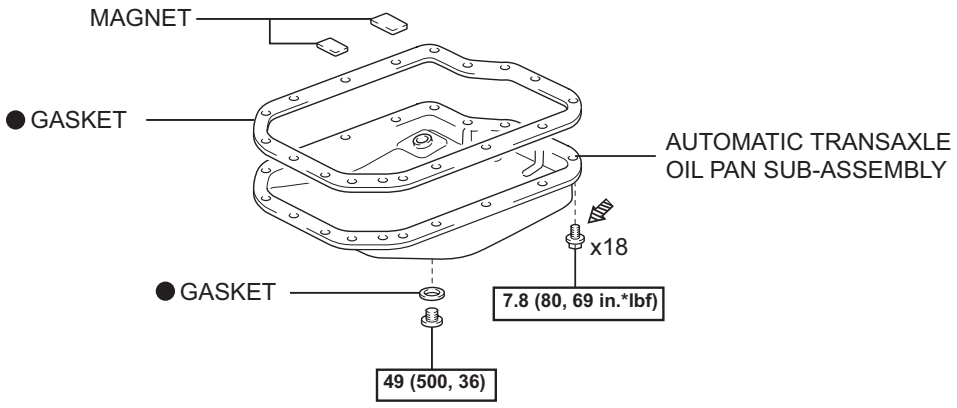

← Apply ATF
● Non-reusable part
Precoated part
N*m (kgf*cm, ft.*lbf): Specified torque

P

C119004E05

REMOVAL

1. DISCONNECT CABLE FROM NEGATIVE BATTERY TERMINAL

2. REMOVE ENGINE UNDER COVER NO.1

3. DRAIN AUTOMATIC TRANSAXLE FLUID

(a) Remove the drain plug and gasket, and drain the ATF.

(b) Install a new gasket and the drain plug.
Torque: 49 N*m (500 kgf*cm, 36 ft.*lbf)

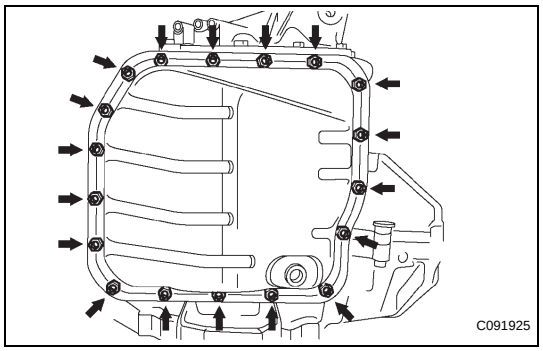

4. REMOVE AUTOMATIC TRANSAXLE OIL PAN SUB-ASSEMBLY

(a) Remove the 18 bolts, oil pan and gasket.
NOTICE:
Some fluid will remain in the oil pan. Carefully remove the oil pan so that fluid remaining in the pan does not spill out.

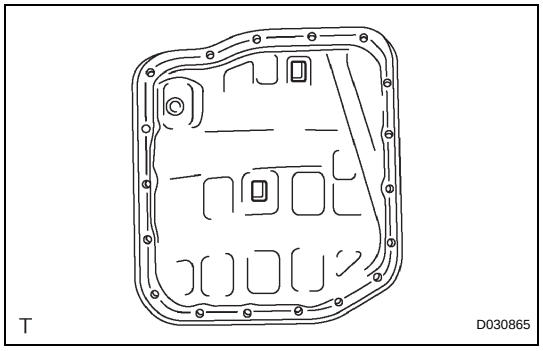

(b) Remove the 2 magnets from the oil pan.

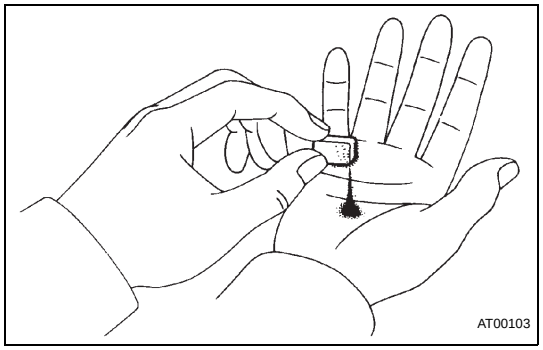

(c) Examine particles in the pan.

(1) Collect any steel chips using the removed magnets. Look carefully at the chips and particles in the pan and on the magnets to see the type of wear which might be found in the transaxle.
Result:
Steel (magnetic):
Wear of the bearing, gear or plate
Brass (non-magnetic):
Wear of the bearing

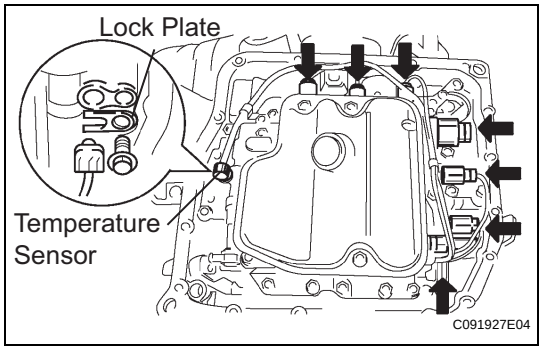

5. DISCONNECT TRANSMISSION WIRE

(a) Disconnect the 7 shift solenoid valve connectors.

(b) Remove the bolt and lock plate, and disconnect the ATF temperature sensor.

AX

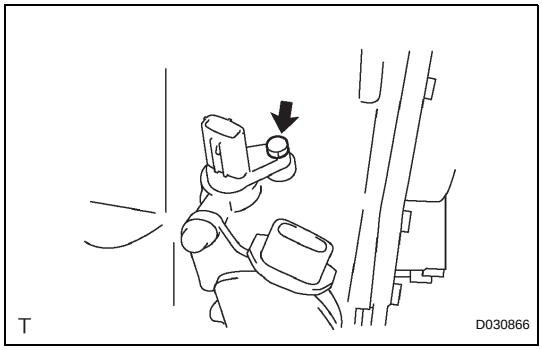

6. REMOVE TRANSMISSION WIRE

(a) Disconnect the transmission wire connector.
(b) Remove the bolt and transmission wire.
(c) Remove the O-ring from the transmission wire.

INSTALLATION

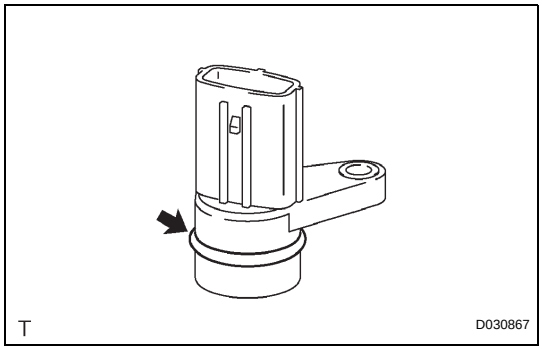

1. INSTALL TRANSMISSION WIRE

(a) Coat the O-ring of the transmission wire connector with ATF and install it.

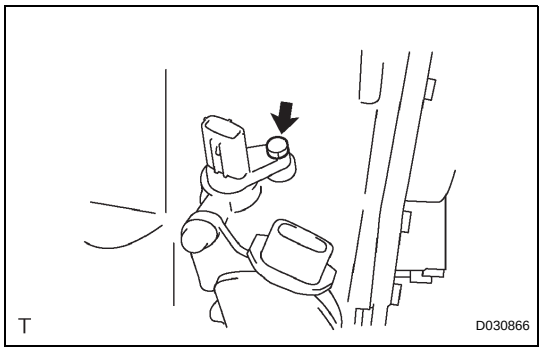

(b) Install the transmission wire with the bolt.
Torque: 5.4 N*m (55 kgf*cm, 48 ft.*lbf)

AX

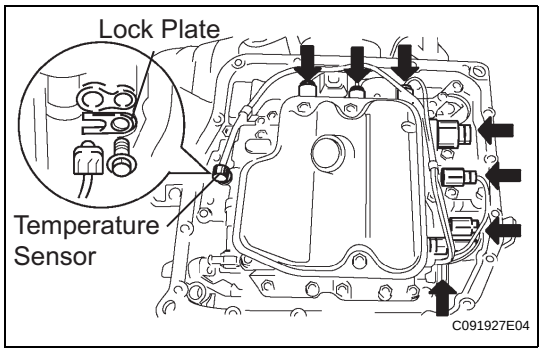

2. CONNECT TRANSMISSION WIRE

(a) Coat the O-ring of the ATF temperature sensor with ATF.
(b) Install the ATF temperature sensor with the lock plate and bolt.
Torque: 6.6 N*m (67 kgf*cm, 58 ft.*lbf)
(c) Connect the 7 shift solenoid valve connectors.

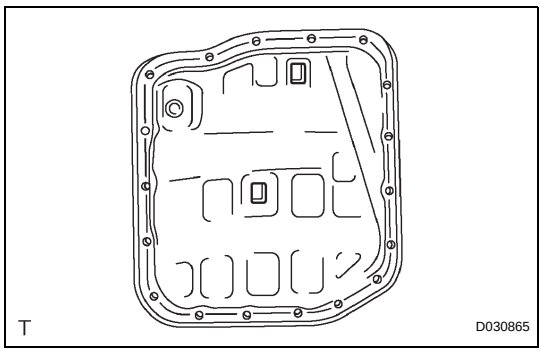

3. INSTALL AUTOMATIC TRANSAXLE OIL PAN SUB-ASSEMBLY

(a) Install the 2 magnets in the oil pan.
(b) Apply seal packing to the 18 bolts.
Seal packing:
THREE BOND 2430 or equivalent

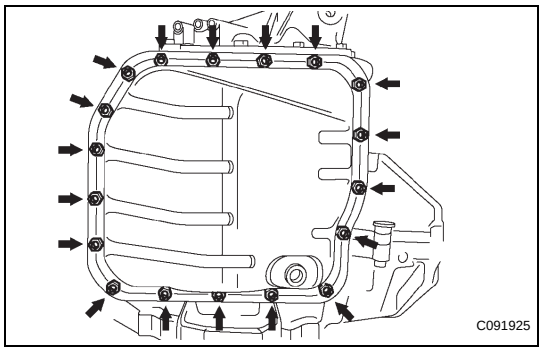

(c) Using a new gasket, install the oil pan to the transaxle case with the 18 bolts.
Torque: 7.8 N*m (80 kgf*cm, 69 in.*lbf)
NOTICE:
Apply seal packing to the bolts and tighten them within 10 minutes of application.

4. **CONNECT CABLE TO NEGATIVE BATTERY TERMINAL**

5. **ADD AUTOMATIC TRANSAXLE FLUID**

6. **INSPECT AUTOMATIC TRANSAXLE FLUID (See page AX-123)**

7. **INSTALL ENGINE UNDER COVER NO.1**

8. **RESET MEMORY**
HINT:
(See page AX-16)