DIFFERENTIAL OIL SEAL

COMPONENTS

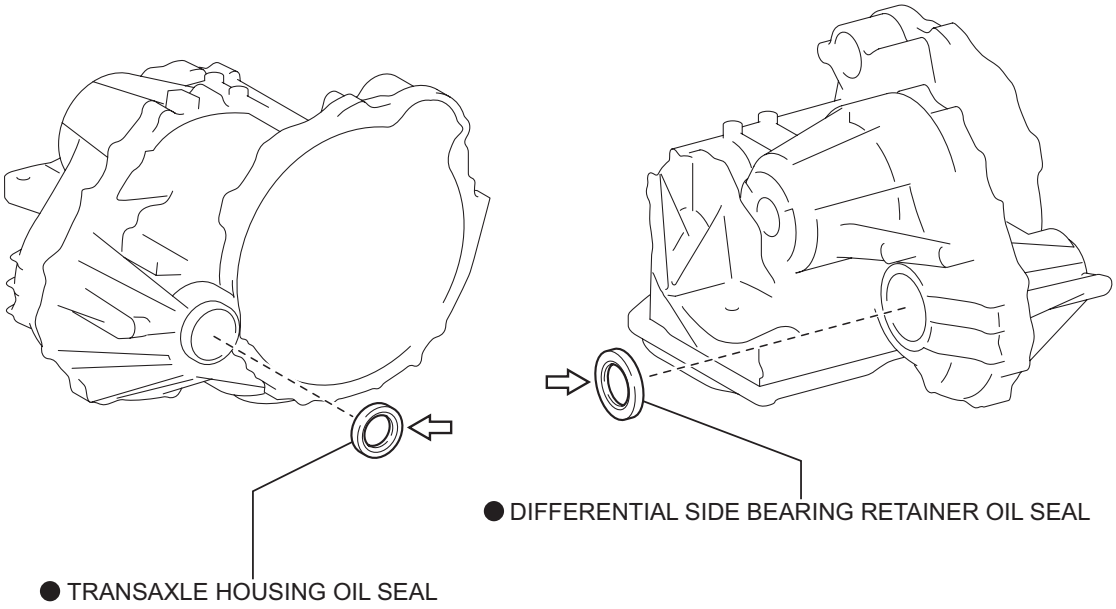

⇦ Apply MP grease

● Non-reusable part

T

C126455E01

REMOVAL

1. **REMOVE FRONT WHEELS**
2. **REMOVE ENGINE UNDER COVER NO.1**
3. **DRAIN AUTOMATIC TRANSAXLE FLUID**
   (a) Remove the drain plug, gasket and drain ATF.
   (b) Install a new gasket and the drain plug.
   Torque: 49 N*m (500 kgf*cm, 36 ft.*lbf)
4. **REMOVE FRONT DRIVE SHAFT ASSEMBLY LH**
   HINT:
   (See page DS-6)
   SST 09520-01010, 09520-24010 (09520-32040)
5. **REMOVE FRONT DRIVE SHAFT ASSEMBLY RH (for 2WD)**
   HINT:
   (See page DS-6)
6. **REMOVE TRANSAXLE HOUSING OIL SEAL**
   (a) Using SST, pull out the oil seal.
   SST 09308-00010

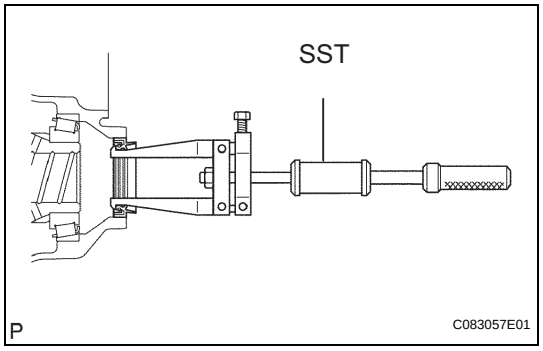

7. **REMOVE DIFFERENTIAL SIDE BEARING RETAINER OIL SEAL**
   (a) Using SST, pull out the oil seal.
   SST 09308-00010

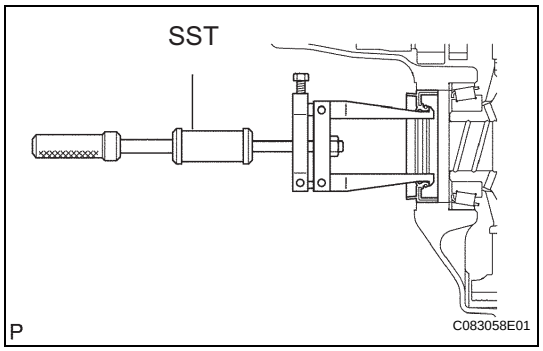

INSTALLATION

1. **INSTALL TRANSAXLE HOUSING OIL SEAL**
   (a) Using SST and a hammer, install a new oil seal.
   SST 09316-60011 (09316-00011)
   Oil seal installation depth:
   -0.5 to 0.5 mm (-0.020 to 0.020 in.)
   (b) Coat the lip of the oil seal with MP grease.

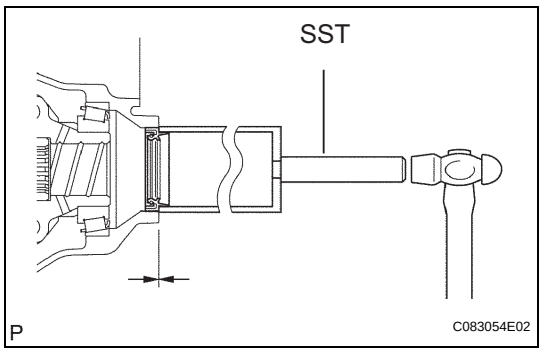

AX

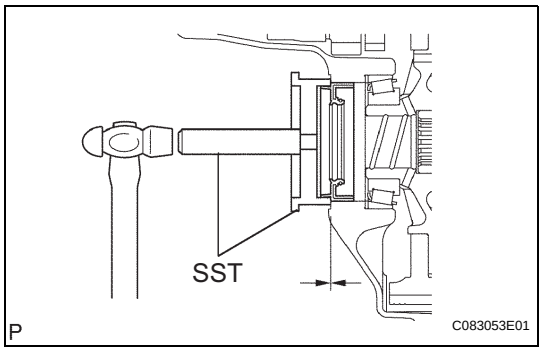

2. **INSTALL DIFFERENTIAL SIDE BEARING RETAINER OIL SEAL**
   (a) Using SST and a hammer, install a new oil seal.
   SST 09223-15020, 09950-70010 (09951-07150)
   Oil seal installation depth:
   -0.5 to 0.5 mm (-0.020 to 0.020 in.)
   (b) Coat the lip of the oil seal with MP grease.
3. **INSTALL FRONT DRIVE SHAFT ASSEMBLY LH**
   HINT:
   (See page DS-17)
4. **INSTALL FRONT DRIVE SHAFT ASSEMBLY RH (for 2WD)**
   HINT:
   (See page DS-17)
5. **INSTALL FRONT WHEELS**
   Torque: 103 N*m (1,050 kgf*cm, 76 ft.*lbf)
6. **ADD AUTOMATIC TRANSAXLE FLUID**
7. **INSPECT AUTOMATIC TRANSAXLE FLUID (See page AX-123)**
8. **INSTALL ENGINE UNDER COVER NO.1**
9. **CHECK ABS SPEED SENSOR SIGNAL**
   HINT:
   (See page BC-82)