OIL PUMP

COMPONENTS

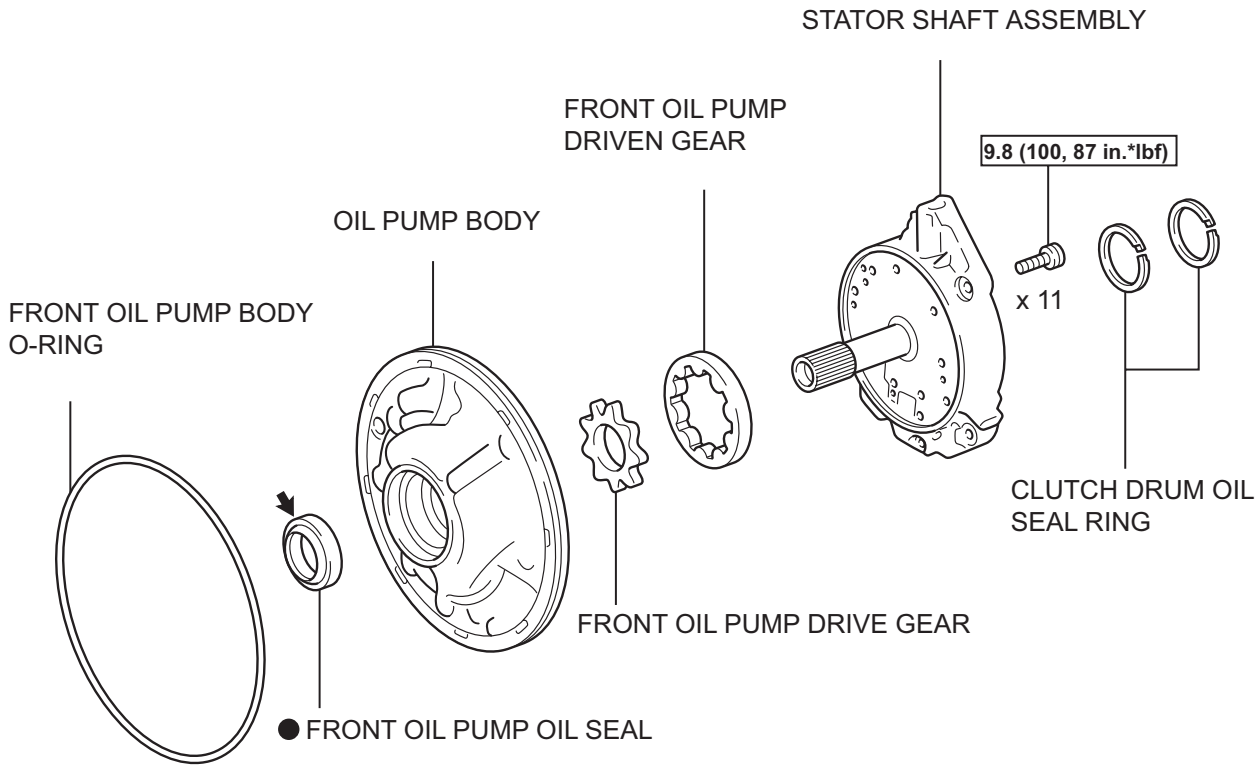

AX

N*m (kgf*cm, ft.*lbf) : Specified torque

● Non-reusable part

⬅ Apply petroleum jelly

N

C114866E01

DISASSEMBLY

1. INSPECT OIL PUMP ASSEMBLY

HINT:

(See page AX-234)

2. REMOVE CLUTCH DRUM OIL SEAL RING

(a) Remove the 2 clutch drum oil seal rings.

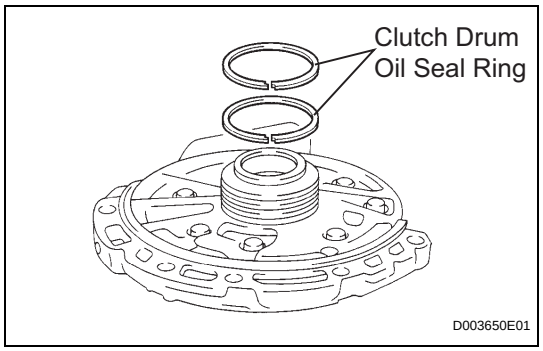

3. REMOVE STATOR SHAFT ASSEMBLY

(a) Using a "torx" socket (T30), remove the 11 bolts and stator shaft.

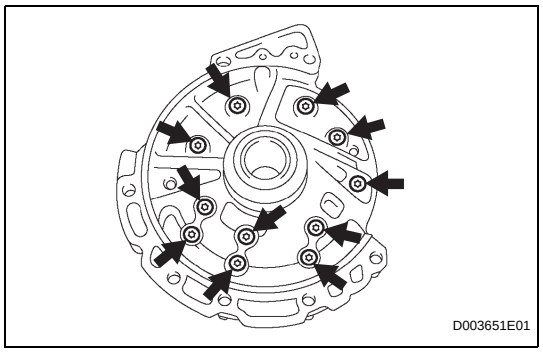

4. INSPECT CLEARANCE OF OIL PUMP ASSEMBLY

HINT:

(See page AX-234)

5. REMOVE FRONT OIL PUMP DRIVE GEAR

(a) Remove the front oil pump drive gear.

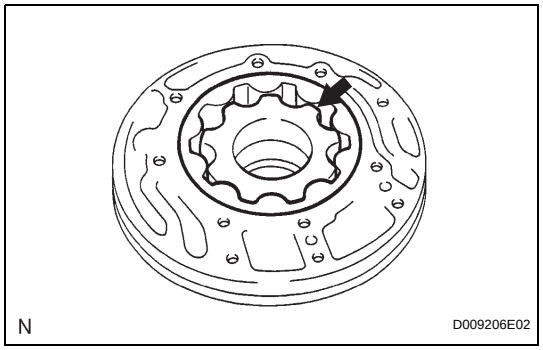

6. REMOVE FRONT OIL PUMP DRIVEN GEAR

(a) Remove the front oil pump driven gear.

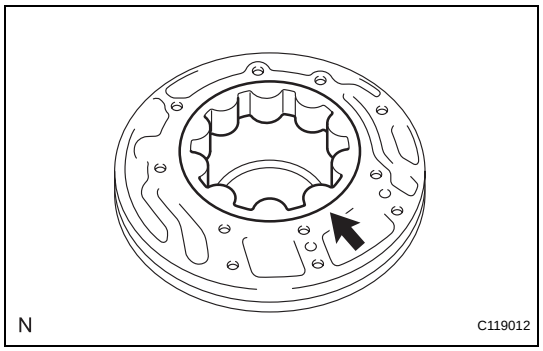

AX

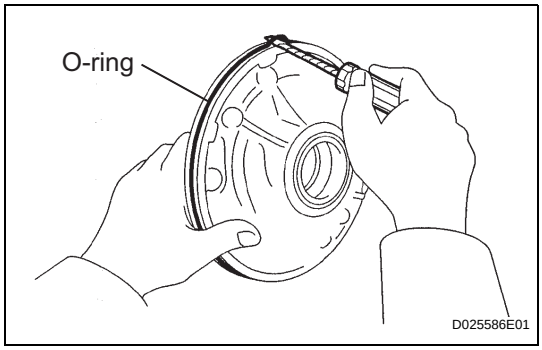

7. REMOVE FRONT OIL PUMP BODY O-RING

(a) Using a screwdriver, remove the O-ring.
HINT:
Tape the screwdriver before use.

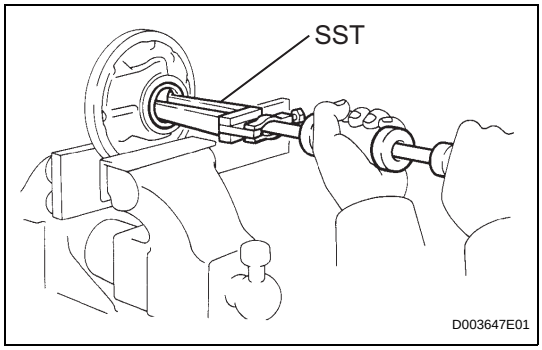

8. REMOVE FRONT OIL PUMP OIL SEAL

(a) Mount the oil pump in a soft jaw vise.
(b) Using SST, remove the oil seal from the oil pump body.
SST 09308-00010

INSPECTION

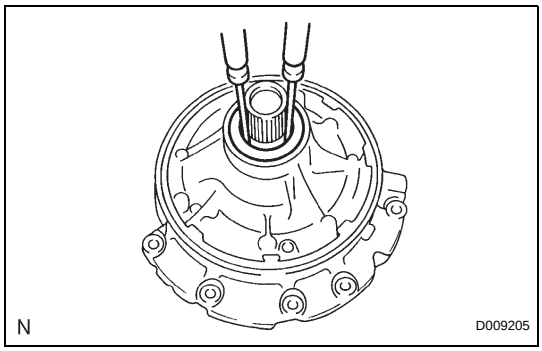

1. INSPECT OIL PUMP ASSEMBLY

(a) Turn the drive gear with the 2 screwdrivers and make sure that it rotates smoothly.
NOTICE:
Be careful not to damage the oil seal lip.

AX

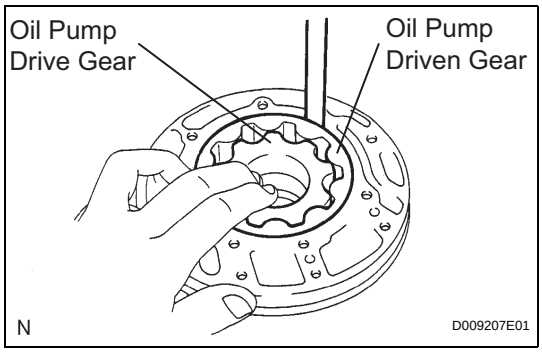

2. INSPECT CLEARANCE OF OIL PUMP ASSEMBLY

(a) Push the driven gear to one side of the body.
(b) Using a feeler gauge, measure the clearance.
Standard body clearance:
0.10 to 0.17 mm (0.0039 to 0.0067 in.)
Side clearance:
0.02 to 0.05 mm (0.001 to 0.002 in.)
Maximum body clearance:
0.17 mm (0.0067 in.)
If the body clearance is greater than the maximum, replace the oil pump body sub-assembly.

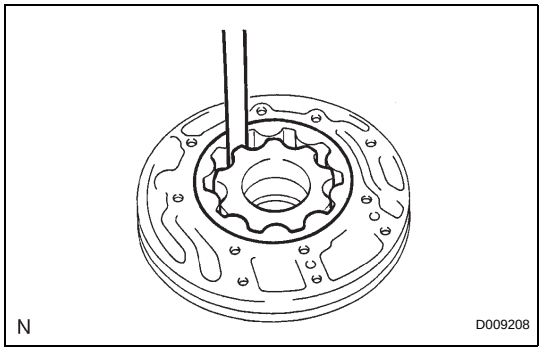

(c) Using a feeler gauge, measure the tip clearance between the driven gear teeth and drive gear teeth.
Standard tip clearance:
0.07 to 0.15 mm (0.0028 to 0.0059 in.)
Maximum tip clearance:
0.15 mm (0.0059 in.)
If the tip clearance is greater than the maximum, replace the oil pump body sub-assembly.

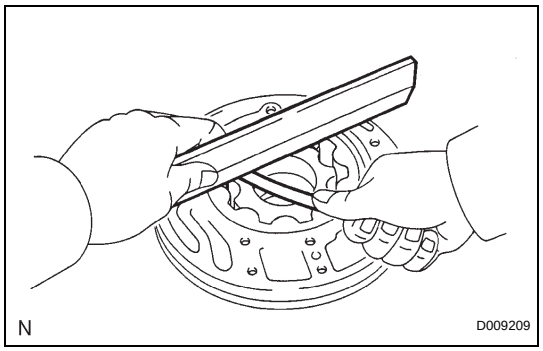

(d) Using a straightedge and feeler gauge, measure the side clearance of both gears.

Standard side clearance:
0.02 to 0.05 mm (0.0008 to 0.0020 in.)
Maximum side clearance:
0.05 mm (0.0020 in.)

Drive gear thickness: mm (in.)

Mark	Thickness
A	11.690 to 11.699 (0.4602 to 0.4606)
B	11.700 to 11.709 (0.4606 to 0.4610)
C	11.710 to 11.720 (0.4610 to 0.4614)
D	11.721 to 11.730 (0.4615 to 0.4618)
E	11.731 to 11.740 (0.4619 to 0.4622)

Driven gear thickness: mm (in.)

Mark	Thickness
A	11.690 to 11.699 (0.4602 to 0.4606)
B	11.700 to 11.709 (0.4606 to 0.4610)
C	11.710 to 11.720 (0.4610 to 0.4614)
D	11.721 to 11.730 (0.4615 to 0.4618)
E	11.731 to 11.740 (0.4619 to 0.4622)

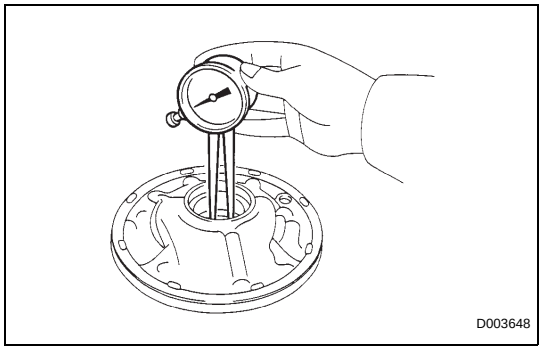

3. INSPECT FRONT OIL PUMP AND GEAR BODY SUB-ASSEMBLY

(a) Using a dial indicator, measure the inside diameter of the oil pump body bushing.

Standard inside diameter:
38.113 to 38.138 mm (1.50051 to 1.50149 in.)
Maximum inside diameter:
38.188 mm (1.50346 in.)

If the inside diameter is greater than the maximum, replace the oil pump body sub-assembly.

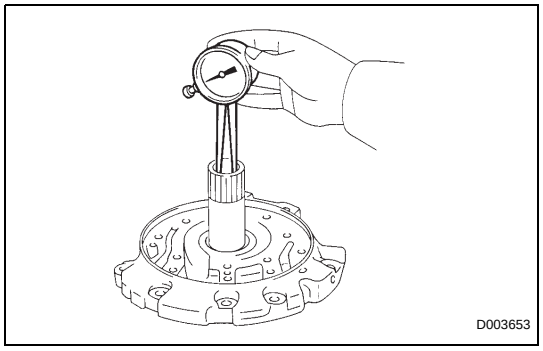

4. INSPECT STATOR SHAFT ASSEMBLY

(a) Using a dial indicator, measure the inside diameter of the stator shaft.

Standard inside diameter:
21.500 to 21.526 mm (0.84646 to 0.84748 in.)
Maximum inside diameter:
21.57 mm (0.8492 in.)

If the inside diameter is greater than the maximum, replace the stator shaft.

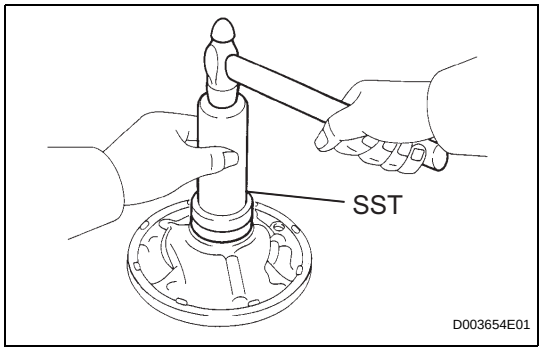

REASSEMBLY

1. INSTALL FRONT OIL PUMP OIL SEAL

(a) Using SST and a hammer, install a new oil seal to the oil pump body.

SST 09350-32014 (09351-32140)

HINT:
The seal end should be flat with the outer edge of the oil pump.

(b) Coat the lip of the oil seal with MP grease.

AX

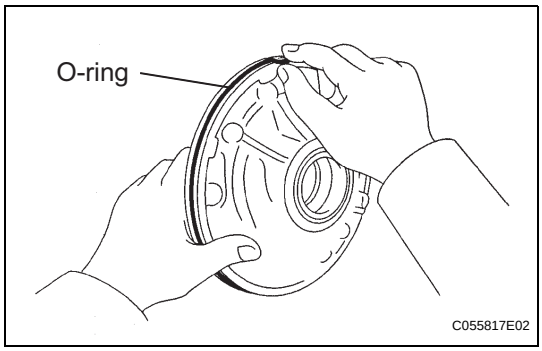

2. INSTALL FRONT OIL PUMP BODY O-RING

(a) Coat new O-ring with ATF, and install it to the oil pump body.

NOTICE:

Make sure that the O-ring is not twisted or pinched. Moreover, apply enough ATF to the O-ring before installation.

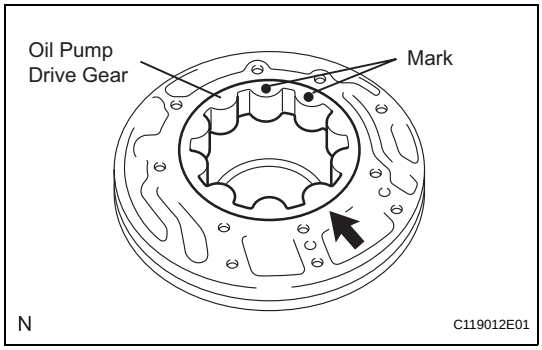

3. INSTALL FRONT OIL PUMP DRIVEN GEAR

(a) Coat the front oil pump driven gear with ATF, and install it to the oil pump body with the marked side facing upward.

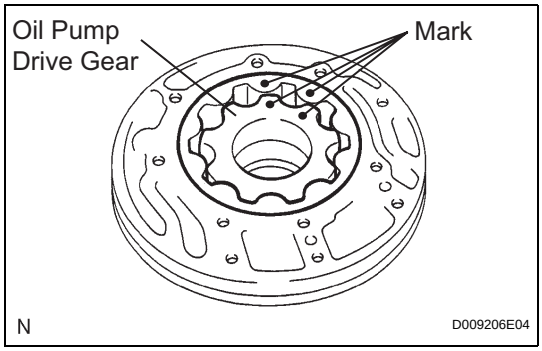

4. INSTALL FRONT OIL PUMP DRIVE GEAR

(a) Coat the front oil pump drive gear with ATF, and install it to the oil pump body with the marked side facing upward.

AX

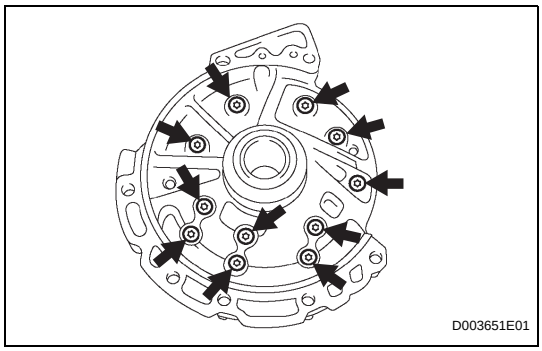

5. INSTALL STATOR SHAFT ASSEMBLY

(a) Set the stator shaft and align it with each bolt hole.

(b) Using a "torx" socket (T30), install the 11 bolts.

Torque: 9.8 N*m (100 kgf*cm, 87 in.*lbf)

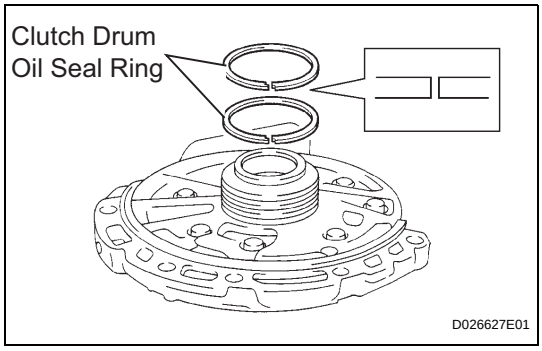

6. INSTALL CLUTCH DRUM OIL SEAL RING

(a) Coat 2 new clutch drum oil seal rings with ATF.

(b) Install 2 new clutch drum oil seal rings.

NOTICE:

Do not expand the ring ends excessively.

7. INSPECT OIL PUMP ASSEMBLY

HINT:

(See page AX-234)