UNDERDRIVE PLANETARY GEAR

COMPONENTS

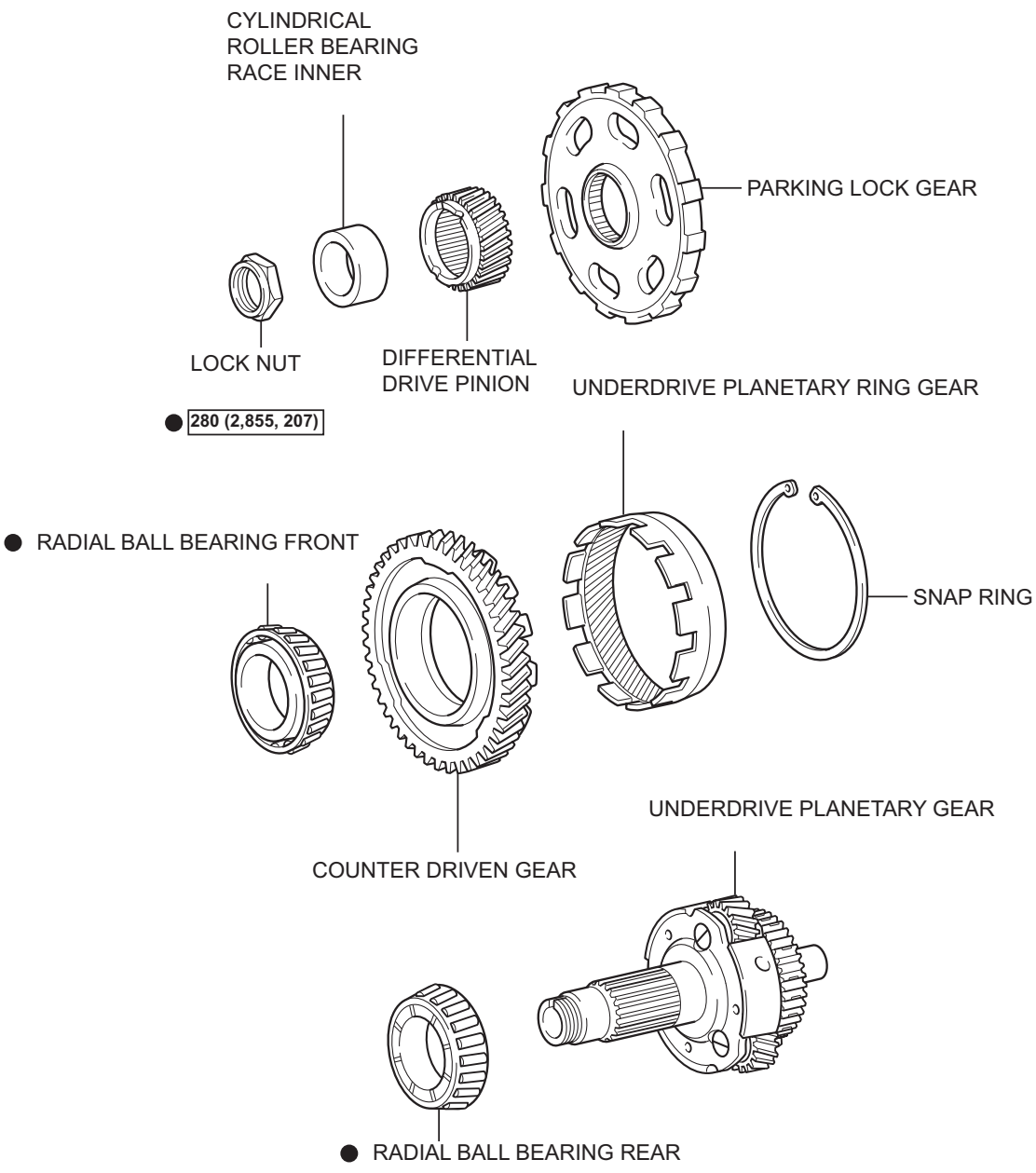

N*m (kgf*cm, ft.*lbf): Specified torque

● Non-reusable part

N

C114868E03

AX

DISASSEMBLY

1. INSPECT UNDERDRIVE PLANETARY GEAR PRELOAD

HINT:

(See page AX-256)

2. REMOVE FRONT PLANETARY GEAR NUT

(a) Using SST, loosen the staked part of the lock nut.

SST 09930-00010 (09931-00010, 09931-00020), 09387-00050

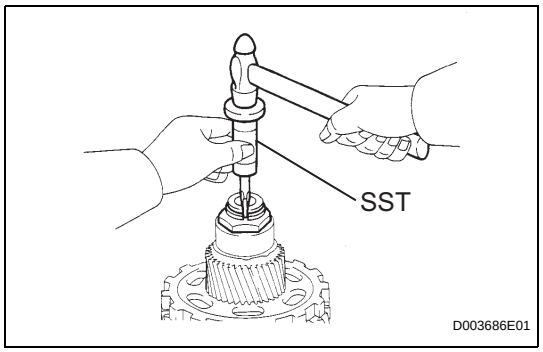

(b) Place the underdrive planetary gear in a soft jaw vise.

NOTICE:

Be careful not to damage the differential drive pinion.

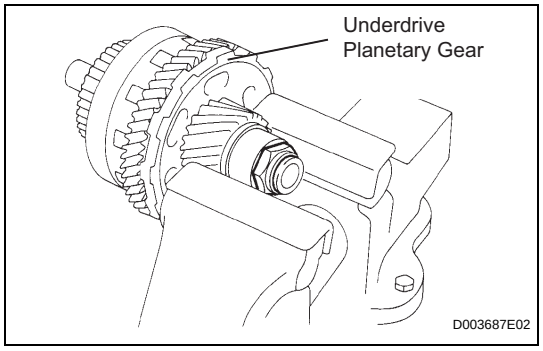

(c) Using a socket wrench, remove the lock nut.

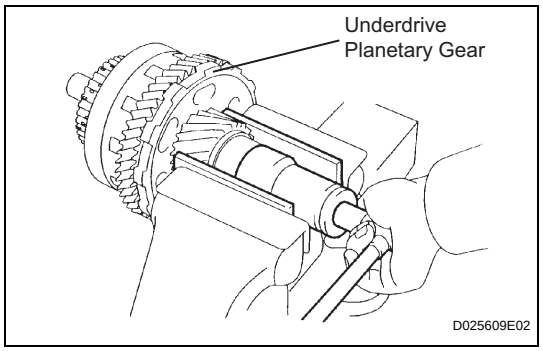

3. REMOVE CYLINDRICAL ROLLER BEARING RACE INNER

(a) Using SST, remove the cylindrical roller bearing race inner.

SST 09950-00020, 09950-00030, 09950-60010 (09951-00320, 09957-04010)

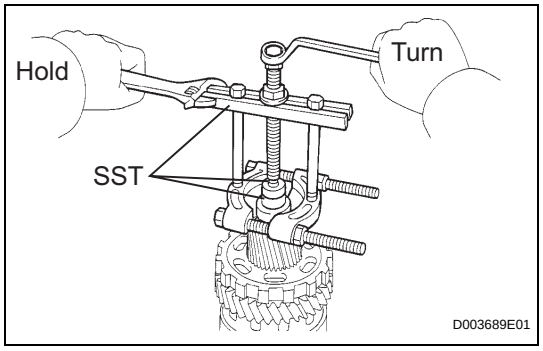

AX

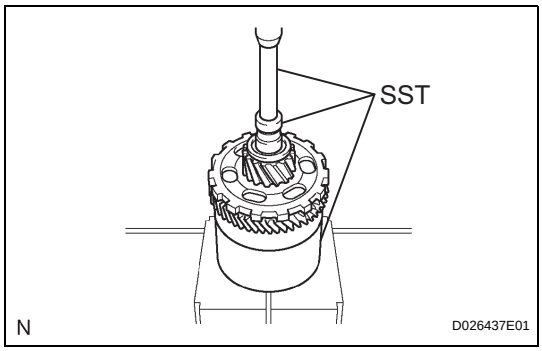

4. REMOVE UNDERDRIVE PLANETARY GEAR ASSEMBLY

(a) Using SST and a press, remove the differential drive pinion, parking lock gear, counter driven gear with underdrive planetary ring gear and radial ball bearing front.

SST 09950-60010 (09951-00320), 09387-00050, 09950-00020, 09950-00030, 09950-40011 (09957-04010)

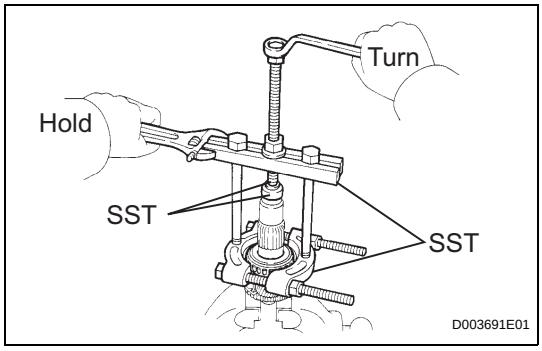

(b) Place the underdrive planetary gear in a soft jaw vise.

(c) Using SST, remove the radial ball bearing rear from the underdrive planetary gear.

SST 09950-60010 (09951-00320), 09950-00030, 09950-40011 (09957-04010)

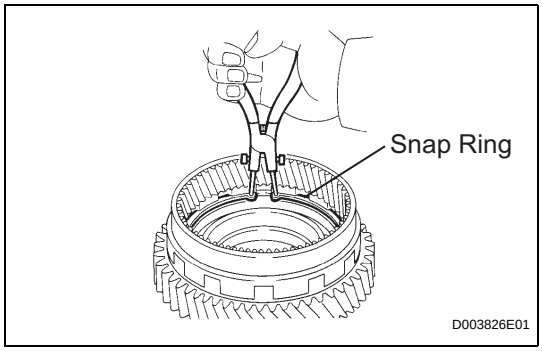

5. REMOVE UNDERDRIVE PLANETARY RING GEAR

(a) Using a snap ring pliers, remove the snap ring.

AX

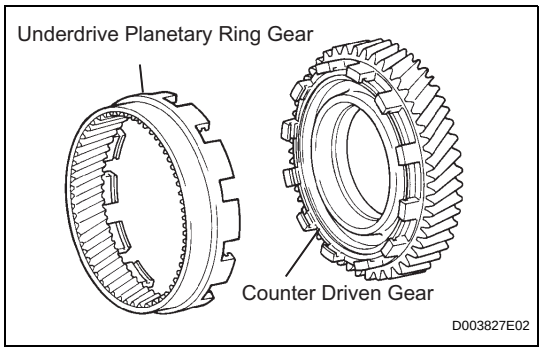

(b) Remove the underdrive planetary ring gear from the counter driven gear.

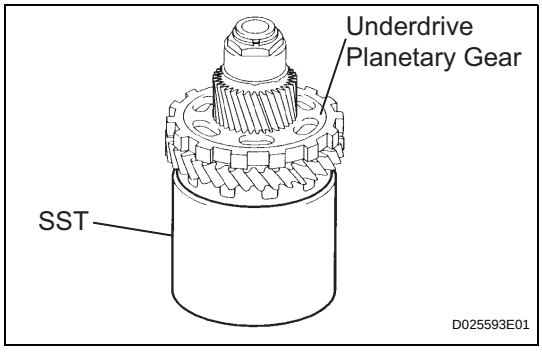

INSPECTION

1. INSPECT UNDERDRIVE PLANETARY GEAR PRELOAD

(a) Using SST, fix the underdrive planetary gear assembly.

SST 09387-00050

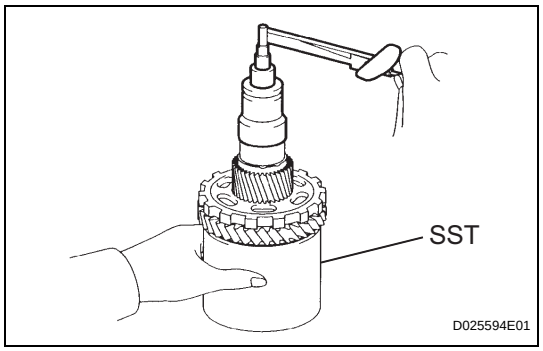

(b) Using SST and a torque wrench, measure the turning torque of the underdrive planetary gear assembly while rotating the torque wrench at 60 rpm.
SST 09387-00050
Turning torque at 60 rpm.:
0.50 to 1.42 N*m (5.1 to 14.5 kgf*cm, 4.4 to 12.6 in.*lbf)
HINT:
Use a torque wrench with a fulcrum length of 160 mm (6.3 in.).

REASSEMBLY

1. INSTALL UNDERDRIVE PLANETARY RING GEAR

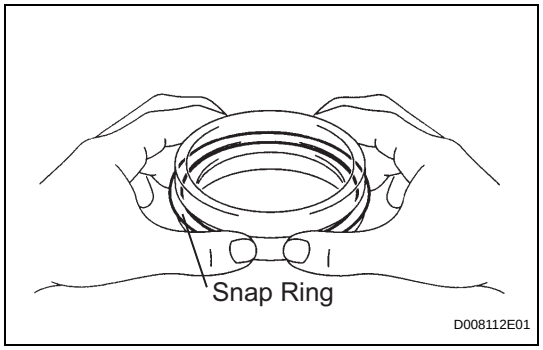

(a) Install a new snap ring to the outer race of the radial ball bearing rear.
HINT:
When replacing the bearing, also replace the counter driven gear with a new one.

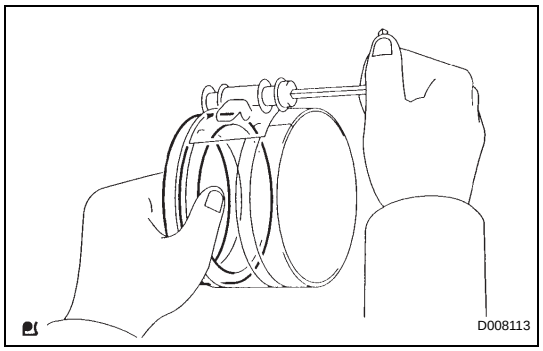

(b) Using a piston ring compressor, squeeze the snap ring.

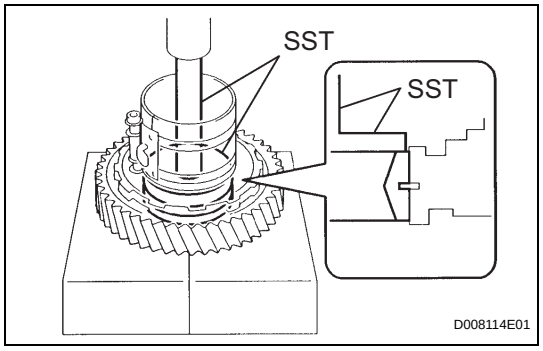

(c) Using SST and a press, press in the outer race of the radial ball bearing rear.
SST 09950-60020 (09951-00890), 09950-70010 (09951-07100)
NOTICE:
Be sure not to damage the snap ring during outer race installation.

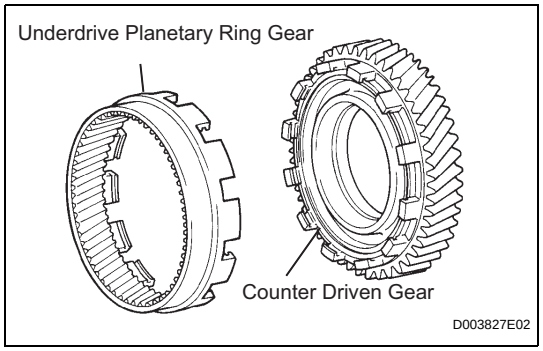

(d) Install the underdrive planetary ring gear to the counter driven gear.

AX

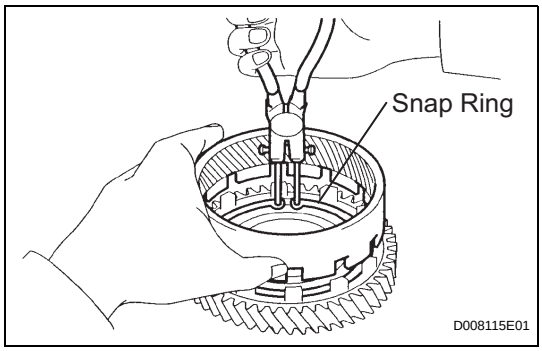

(e) Using a snap ring pliers, install the snap ring.

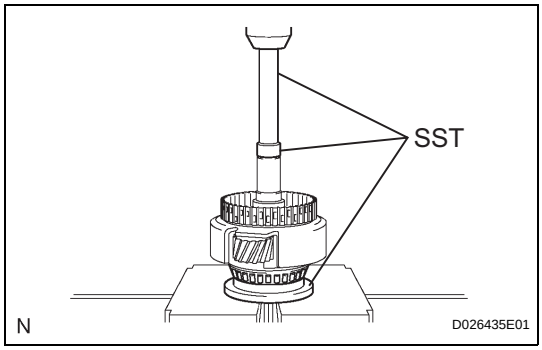

2. INSTALL UNDERDRIVE PLANETARY GEAR ASSEMBLY

(a) Using SST and a press, press the radial ball bearing rear in the underdrive planetary gear.

SST 09502-12010, 09950-60010 (09951-00260), 09950-70010 (09951-07100)

NOTICE:

Press the bearing until it becomes flat at the bottom.

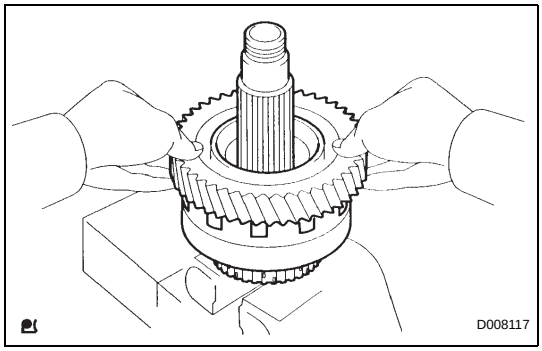

(b) Install the counter driven gear with planetary ring gear to the underdrive planetary gear.

AX

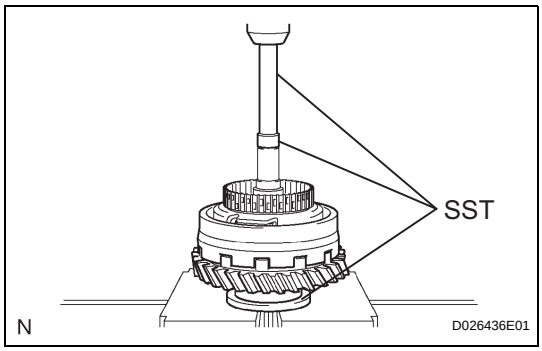

(c) Using SST and a press, press in the radial ball bearing front.

SST 09502-12010, 09950-60010 (09951-00260), 09950-70010 (09951-07100)

NOTICE:

Press the counter driven gear while rotating it.

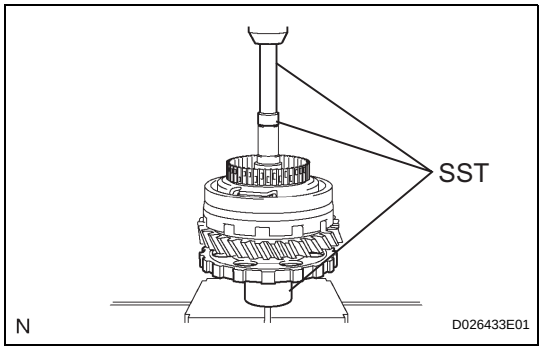

(d) Using SST and a press, press in the parking lock gear.

SST 09502-12010, 09950-60010 (09951-00260), 09950-70010 (09951-07100)

NOTICE:

Press the counter driven gear while rotating it.

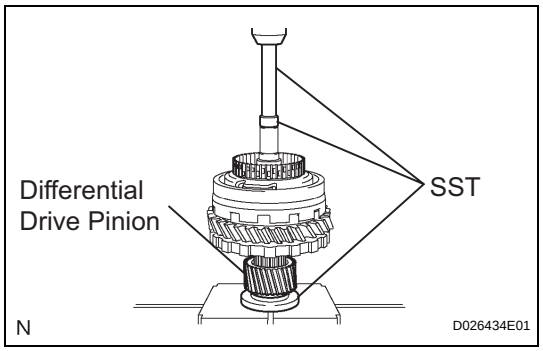

3. INSTALL DIFFERENTIAL DRIVE PINION

(a) Using SST and a press, press the differential drive pinion.

SST 09726-40010, 09950-60010 (09951-00260), 09950-70010 (09951-07100)

NOTICE:

Press the counter driven gear while rotating it.

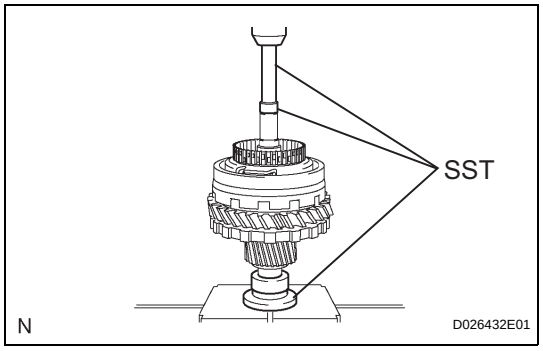

4. INSTALL CYLINDRICAL ROLLER BEARING RACE INNER

(a) Using SST and a press, press the cylindrical roller bearing race inner.

SST 09506-35010, 09950-60010 (09951-00260), 09950-70010 (09951-07100)

NOTICE:

Press the counter driven gear while rotating it.

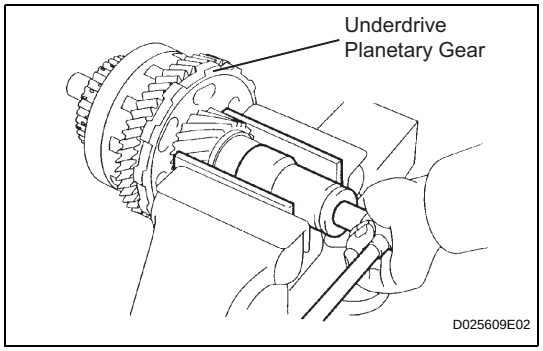

5. INSTALL FRONT PLANETARY GEAR NUT

(a) Place the underdrive planetary gear in a soft jaw vise.

NOTICE:

Be careful not to damage the differential drive pinion.

(b) Using a socket wrench, install a new lock nut.

Torque: 280 N*m (2,885 kgf*cm, 207 ft.*lbf)

HINT:

Use a torque wrench with a fulcrum length of 750 mm (29.53 in.).

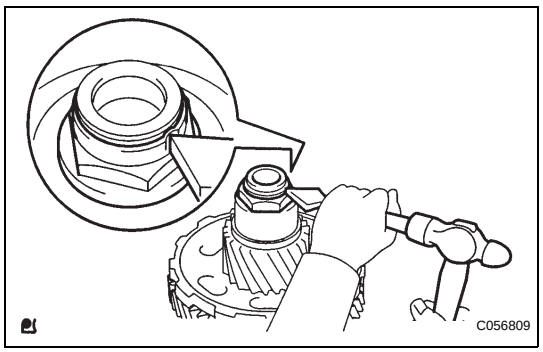

(c) Using a pin punch and hammer, stake the lock nut.

CAUTION:

Be sure that there are no cracks on the nut.

6. INSPECT UNDERDRIVE PLANETARY GEAR PRELOAD

HINT:

(See page AX-256)

AX