DTC	P0798	Pressure Control Solenoid "C" Electrical (Shift Solenoid Valve SL3)

DESCRIPTION

Shifting from 1st to 5th is performed in combination with "ON" and "OFF" operation of the shift solenoid valves SL1, SL2, SL3, S4 and SR which are controlled by the ECM. If an open or short circuit occurs in either of the shift solenoid valves, the ECM controls the remaining normal shift solenoid valves to allow the vehicle to be operated smoothly (Fail safe function).

DTC No.	DTC Detection Condition	Trouble Area
P0798	The ECM checks for an open or short in the shift solenoid valve SL3 circuit while driving and shifting gears. (1-trip detection logic) – Output signal duty equals to 100 %. (NOTE: SL3 output signal duty is less than 100 % under normal condition.)	• Open or short in shift solenoid valve SL3 circuit • Shift solenoid valve SL3 • ECM

MONITOR DESCRIPTION

The ECM commands gear shifts by turning the shift solenoid valves "ON/OFF". When there is an open or short circuit in any shift solenoid valve circuit, the ECM detects the problem and illuminates the MIL and stores the DTC. And the ECM performs the fail-safe function and turns the other normal shift solenoid valves "ON/OFF" (In case of an open or short circuit, the ECM stops sending current to the circuit.)
(See page AX-30).

MONITOR STRATEGY

Related DTCs	P0798: Shift solenoid valve SL3/Range check
Required sensors/Components	Shift solenoid valve SL3
Frequency of operation	Continuous
Duration	1 sec.
MIL operation	Immediate
Sequence of operation	None

AX

TYPICAL ENABLING CONDITIONS

The monitor will run whenever this DTC is not present.	None
Battery voltage	10 V or more
Ignition switch	ON
Starter	OFF

TYPICAL MALFUNCTION THRESHOLDS

Output signal duty	100%

COMPONENT OPERATING RANGE

Output signal duty	Less than 100%

WIRING DIAGRAM

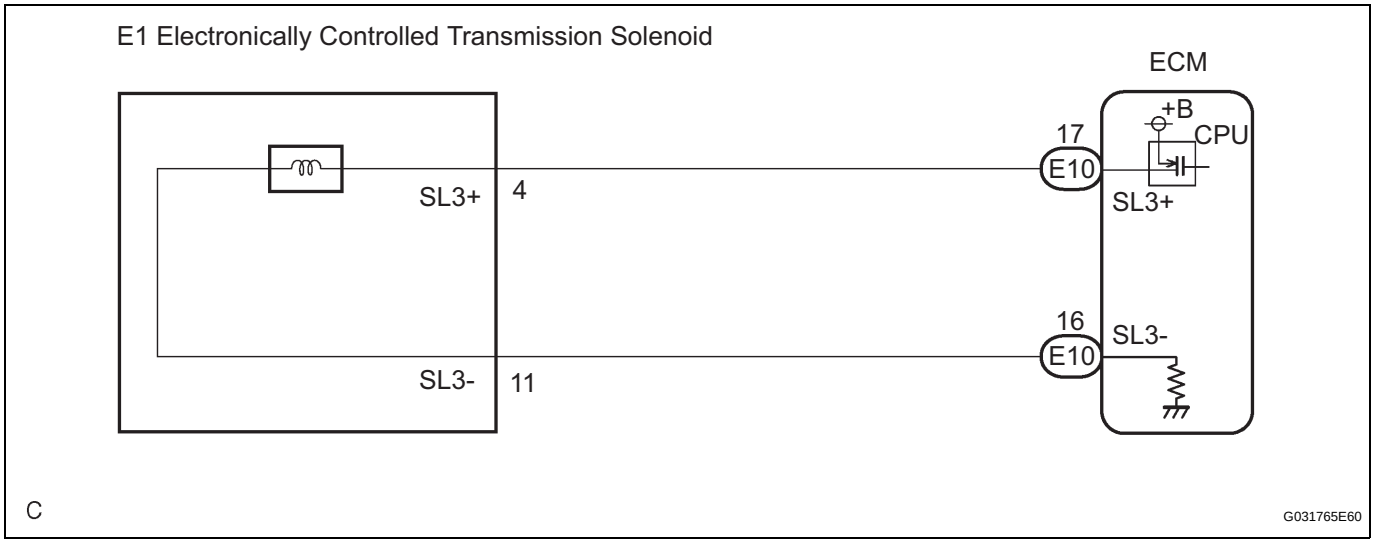

INSPECTION PROCEDURE

1	INSPECT TRANSMISSION WIRE (SL3)

Transmission Wire Side:

(Connector Front View):

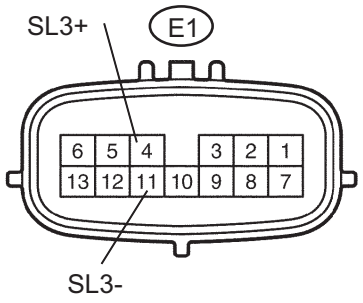

(a) Disconnect the transmission wire connector from the transaxle.

(b) Measure the resistance according to the value(s) in the table below.

Standard resistance

Tester Connection	Specified Condition 20°C (68°F)
4 (SL3+) - 11 (SL3-)	5.0 to 5.6 Ω

(c) Measure the resistance according to the value(s) in the table below.

Standard resistance (Check for short)

Tester Connection	Specified Condition
4 (SL3+) - Body ground	10 kΩ or higher
11 (SL3-) - Body ground	↑

NG → **Go to step 3**

OK

AX

2 CHECK HARNESS AND CONNECTOR (TRANSMISSION WIRE - ECM)

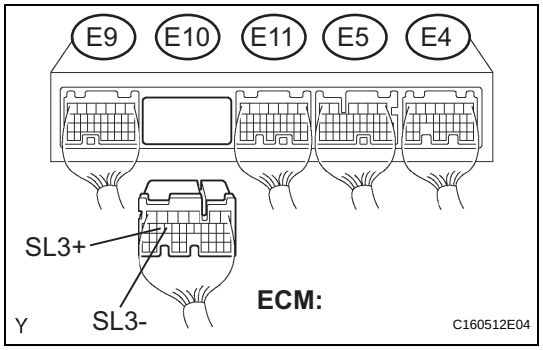

(a) Connect the transmission wire connector to the transaxle.
(b) Disconnect the connector from the ECM.
(c) Measure the resistance according to the value(s) in the table below.

Standard resistance

Tester Connection	Specified Condition 20°C (68°F)
E10-17 (SL3+) - E10-16 (SL3-)	5.0 to 5.6 Ω

(d) Measure the resistance according to the value(s) in the table below.

Standard resistance (Check for short)

Tester Connection	Specified Condition
E10-17 (SL3+) - Body ground	10 kΩ or higher
E10-16 (SL3-) - Body ground	

NG → **REPAIR OR REPLACE HARNESS OR CONNECTOR**

OK

REPLACE ECM

3 INSPECT SHIFT SOLENOID VALVE SL3

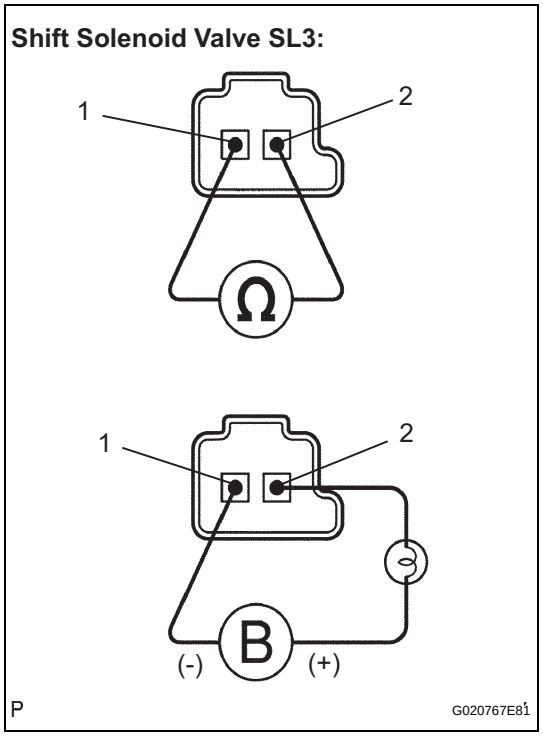

(a) Remove the shift solenoid valve SL3.
(b) Measure the resistance according to the value(s) in the table below.

Standard resistance

Tester Connection	Specified Condition 20°C (68°F)
1 - 2	5.0 to 5.6 Ω

(c) Connect the positive (+) lead with a 21 W bulb to terminal 2 and the negative (-) lead to terminal 1 of the solenoid valve connector, then check the movement of the valve.

OK:

The solenoid makes an operating sound.

NG → **REPLACE SHIFT SOLENOID VALVE SL3**

AX

OK

REPAIR OR REPLACE TRANSMISSION WIRE