DTC	P0717	Turbine Speed Sensor Circuit No Signal

DESCRIPTION

This sensor detects the rotation speed of the input turbine. By comparing the input turbine speed signal (NT) with the counter gear speed sensor signal (NC), the ECM detects the shift timing of the gears and appropriately controls the engine torque and hydraulic pressure according to various conditions. Thus, providing smooth gear shift.

DTC No.	DTC Detection Condition	Trouble Area
P0717	ECM detects conditions (a), (b) and (c) continuously for 5 sec. or more: (1-trip detection logic) (a) Vehicle speed: 50 km/h (31 mph) or more (b) Park/neutral position switch (NSW (STAR) and R) is OFF (c) Speed sensor (NT): less than 300 rpm	• Open or short in transmission revolution sensor NT (speed sensor NT) circuit • Transmission revolution sensor NT (speed sensor NT) • ECM • Automatic transaxle assembly

Reference (Using an oscilloscope):
Check the waveform between terminals NT+ and NT- of the ECM connector.

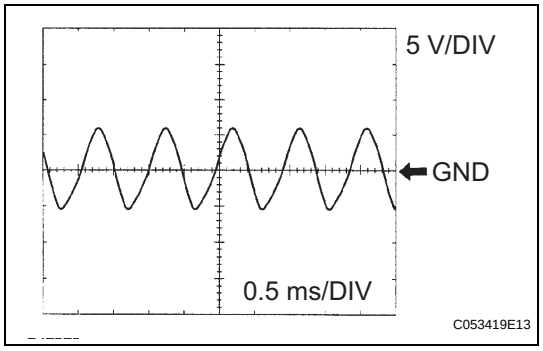

Standard: Refer to the illustration.

Terminal	NT+ - NT-
Tool setting	5 V/DIV., 0.5 ms./DIV.
Vehicle condition	Vehicle speed 20 km/h (12 mph)

MONITOR DESCRIPTION

AX

The NT terminal of the ECM detects a revolution signal from the speed sensor (NT) (input RPM). The ECM calculates a gearshift comparing the speed sensor (NT) with the speed sensor (NC).
While the vehicle is operating in 2nd, 3rd, 4th or 5th gear in the shift position of D, if the input shaft revolution is less than 300 rpm *1although the output shaft revolution is more than 1,000 rpm *2, the ECM detects the trouble, illuminates the MIL and stores the DTC.
*1: Pulse is not output or is irregularly output.
*2: The vehicle speed is 50 km/h (31 mph) or more.

MONITOR STRATEGY

Related DTCs	P0717: Speed sensor (NT)/Verify pulse input
Required sensors/Components	Speed sensor (NT), Speed sensor (NC)
Frequency of operation	Continuous
Duration	5 sec.
MIL operation	Immediate
Sequence of operation	None

TYPICAL ENABLING CONDITIONS

The monitor will run whenever this DTC is not present.	P0500 (VSS) P0748, P0778, P0798 (Shift solenoid valve (range))
Shift change	Shift change is completed and before starting next shift change operation
ECM selected gear	3rd, 4th
Output shaft rpm	1,000 rpm or more
NSW (STAR) switch	OFF
R switch	OFF
L switch	OFF
Engine	Running
Ignition switch	ON
Starter	OFF

TYPICAL MALFUNCTION THRESHOLDS

Sensor signal rpm	Less than 300 rpm

COMPONENT OPERATING RANGE

Speed sensor (NT)	Turbine speed is equal to engine speed with lock-up ON

WIRING DIAGRAM

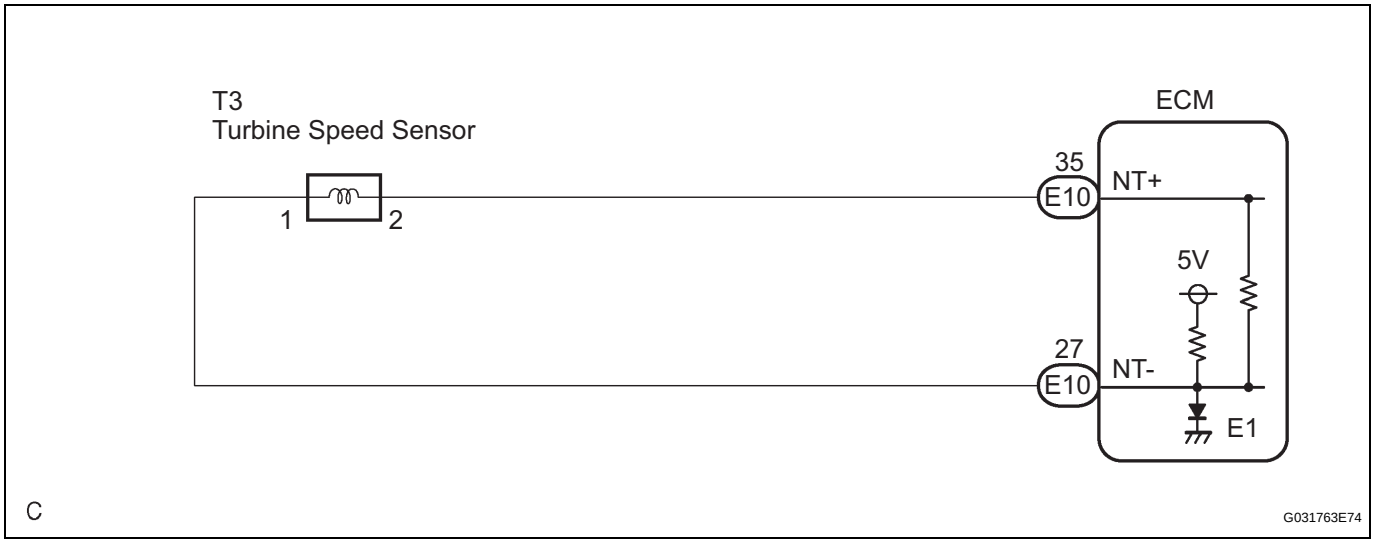

AX

INSPECTION PROCEDURE

1 INSPECT SPEED SENSOR INSTALLATION

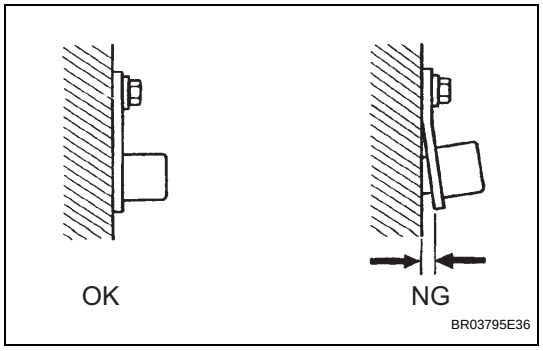

(a) Check the speed sensor installation.
OK:
The installation bolt is tightened properly and there is no clearance between the sensor and transaxle case.

NG → **REPLACE SPEED SENSOR (NT)**

OK

2 INSPECT SPEED SENSOR (NT)

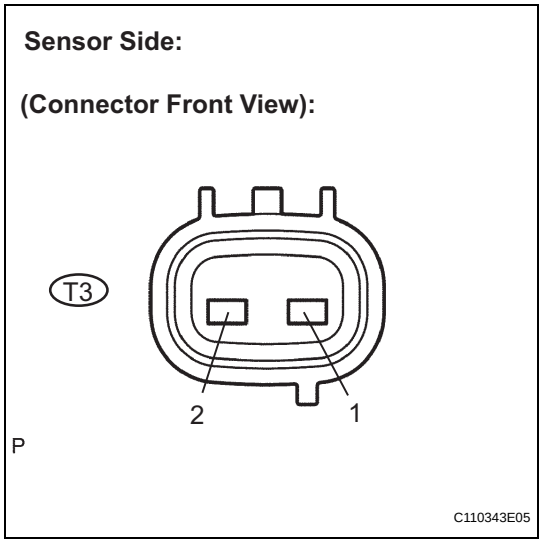

(a) Disconnect the speed sensor connector from the transaxle.
(b) Measure the resistance according to the value(s) in the table below.
Standard resistance

Tester Connection	Specified Condition 20 °C (68 °F)
1 - 2	560 to 680 Ω

NG → **REPLACE SPEED SENSOR (NT)**

OK

3 CHECK HARNESS AND CONNECTOR (SPEED SENSOR - ECM)

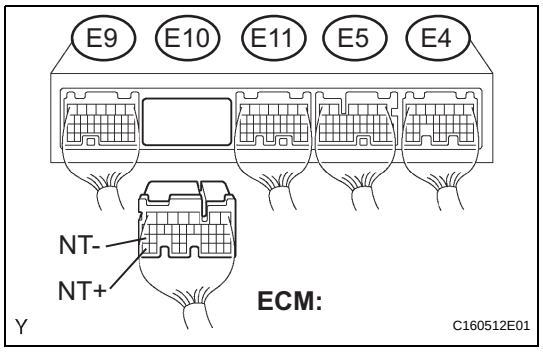

(a) Connect the speed sensor connector.
(b) Disconnect the ECM connector.
(c) Measure the resistance according to the value(s) in the table below.
Standard resistance

Tester Connection	Specified Condition 20°C (68°F)
E10-35 (NT+) - E10-27 (NT-)	560 to 680 Ω

(d) Measure the resistance according to the value(s) in the table below.

AX

Standard resistance (Check for short)

Tester Connection	Specified Condition
E10-35 (NT+) - Body ground	10 kΩ or higher
E10-27 (NT-) - Body ground	

NG → **REPAIR OR REPLACE HARNESS OR CONNECTOR**

OK

REPLACE ECM