INSPECTION

1. INSPECT PARK/NEUTRAL POSITION SWITCH ASSEMBLY OPERATION

(a) Apply the parking brake and turn the ignition switch to the ON position.

(b) Depress the brake pedal and check that the engine starts only when the shift lever is in the N or P position and the engine does not start when the shift lever is in other positions.

(c) Check that the back up light comes on and the reverse warning buzzer sounds only when the shift lever is in the R position and the light and buzzer do not operate when the shift lever is in other positions.

(d) If a failure is found, check the park/neutral position switch for continuity.

2. INSPECT PARK/NEUTRAL POSITION SWITCH ASSEMBLY

(a) Jack up the vehicle.

(b) Disconnect the park/neutral position switch connector.

(c) Measure the resistance according to the value(s) in the table below when the shift lever is moved to each position.

Resistance

Switch Side:

(Connector Front View):

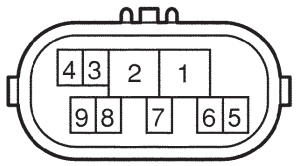

P

C110340E10

Shift Position	Tester Connection	Specified Condition
P	2 - 6 and 4 - 5	Below 1 Ω
Except P		10 kΩ or higher
R	2 - 1	Below 1 Ω
Except R		10 kΩ or higher
N	2 - 9 and 4 - 5	Below 1 Ω
Except N		10 kΩ or higher
D and 4	2 - 7	Below 1 Ω
Except D and 4		10 kΩ or higher
3	2 - 3	Below 1 Ω
Except 3		10 kΩ or higher
2 and L	2 - 8	Below 1 Ω
Except 2 and L		10 kΩ or higher

ADJUSTMENT

1. ADJUST PARK/NEUTRAL POSITION SWITCH ASSEMBLY

(a) Loosen the 2 bolts of the park/neutral position switch and move the shift lever to the N position.

(b) Align the groove with the neutral basic line.

(c) Hold the switch in position and tighten the 2 bolts.

Torque: 5.4 N*m (55 kgf*cm, 48 in.*lbf)

(d) After adjustment, perform the inspection described in park/neutral position switch assembly operation.

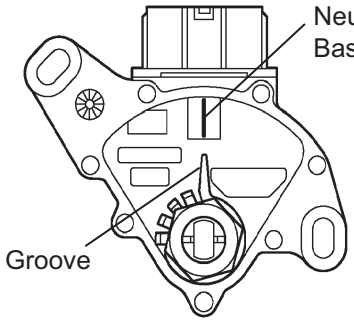

T

C099453E01

AX

INSTALLATION

1. INSTALL PARK/NEUTRAL POSITION SWITCH ASSEMBLY

(a) Install the park/neutral position switch to the manual valve shaft.
(b) Temporarily install the 2 bolts.

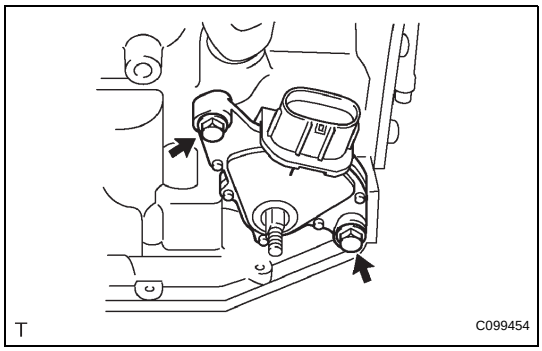

(c) Place a new lock plate and tighten the nut.
Torque: 6.9 N*m (70 kgf*cm, 61 in.*lbf)
(d) Temporarily install the control shaft lever.

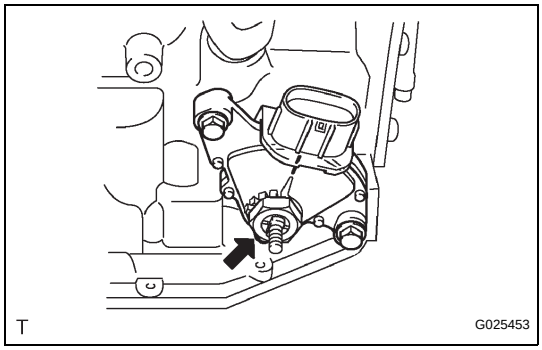

(e) Turn the lever counterclockwise until it stops, then turn it clockwise 2 notches.
(f) Remove the control shaft lever.

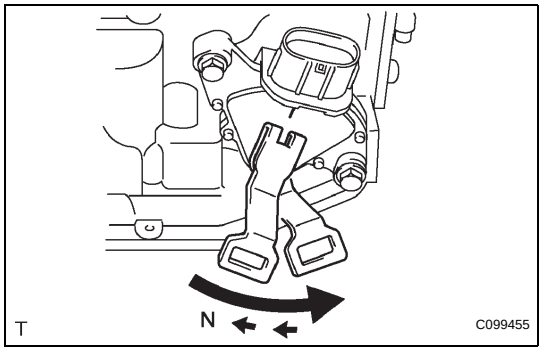

(g) Align the groove with the neutral basic line.
(h) Hold the switch in position and tighten the 2 bolts.
Torque: 5.4 N*m (55 kgf*cm, 48 in.*lbf)

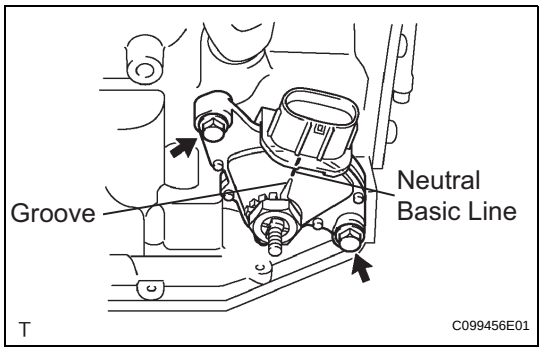

(i) Using a screwdriver, bend the tabs of the lock plate.

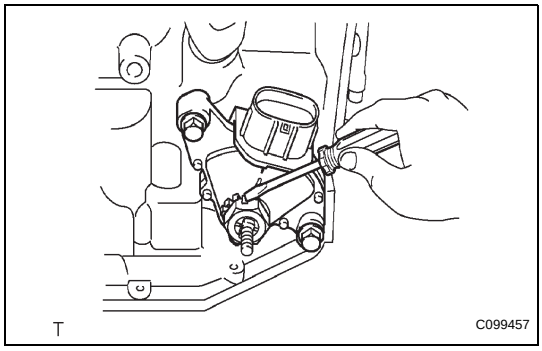

AX

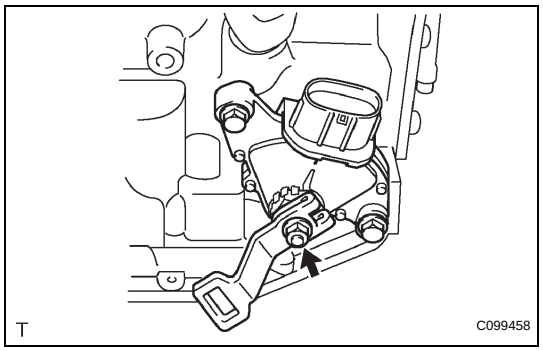

(j) Install the control shaft lever, washer and the nut.
Torque: 13 N*m (130 kgf*cm, 9 ft.*lbf)

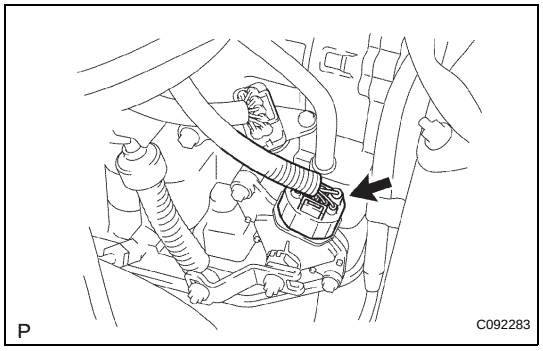

(k) Connect the park/neutral position switch connector.

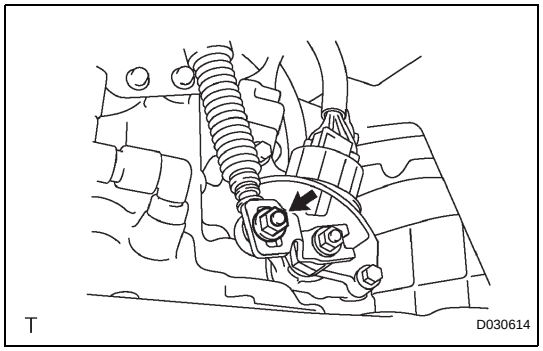

2. CONNECT TRANSMISSION CONTROL CABLE ASSEMBLY

(a) Connect the control cable to the control shaft lever with the nut.
Torque: 13 N*m (133 kgf*cm, 10 ft.*lbf)

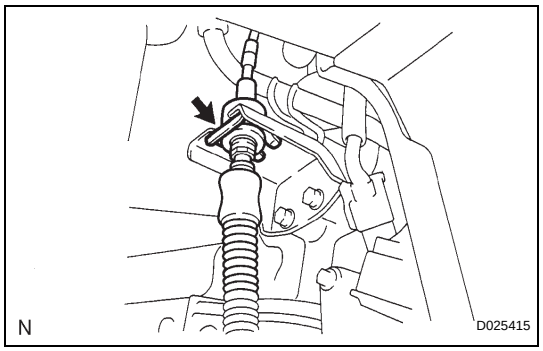

(b) Install the control cable with a new clip to the bracket.

3. ADJUST PARK/NEUTRAL POSITION SWITCH ASSEMBLY (See page AX-127)

4. INSPECT PARK/NEUTRAL POSITION SWITCH ASSEMBLY OPERATION (See page AX-126)

5. INSPECT SHIFT LEVER POSITION (See page AX-148)

6. ADJUST SHIFT LEVER POSITION (See page AX-149)

7. INSTALL AIR CLEANER ASSEMBLY
HINT:
(See page EM-44)

8. INSTALL BATTERY

AX