REMOVAL

1. **REMOVE ENGINE UNDER COVER NO.1**
2. **DISCONNECT CABLE FROM NEGATIVE BATTERY TERMINAL**
3. **DRAIN AUTOMATIC TRANSAXLE FLUID (See page AX-131)**
4. **REMOVE AUTOMATIC TRANSAXLE OIL PAN SUB-ASSEMBLY**

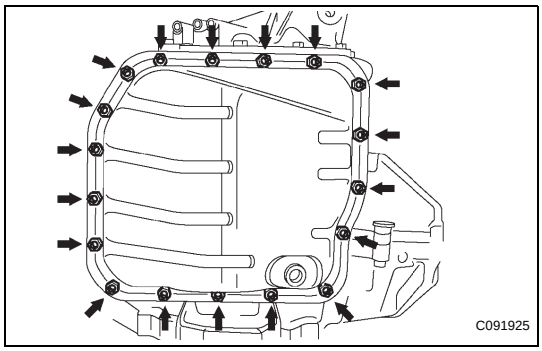

(a) Remove the 18 bolts, oil pan and gasket.

NOTICE:
Some fluid will remain in the oil pan. Carefully remove the oil pan so that the fluid remaining in the pan does not spill out.

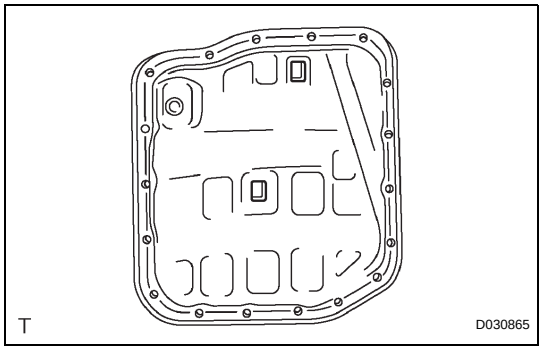

(b) Remove the 2 magnets from the oil pan.

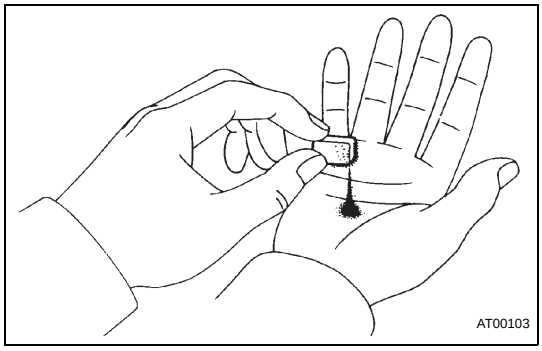

(c) Examine particles in the pan.
   (1) Collect any steel chips using the removed magnets. Look carefully at the chips and particles in the pan and on the magnets to see the type of wear which might be found in the transaxle.
   Result:
   Steel (magnetic):
   Wear of the bearing, gear or plate
   Brass (non-magnetic):
   Wear of the bearing

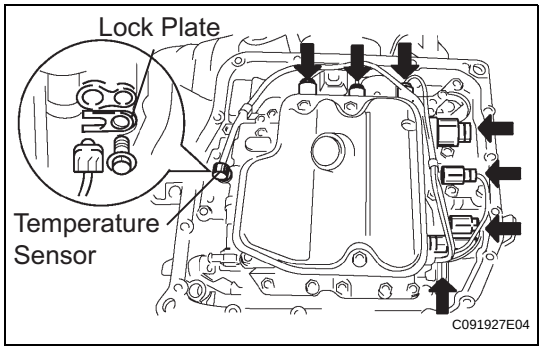

5. **DISCONNECT TRANSMISSION WIRE**
   (a) Disconnect the 7 shift solenoid valve connectors.
   (b) Remove the bolt and lock plate, and disconnect the ATF temperature sensor.

AX

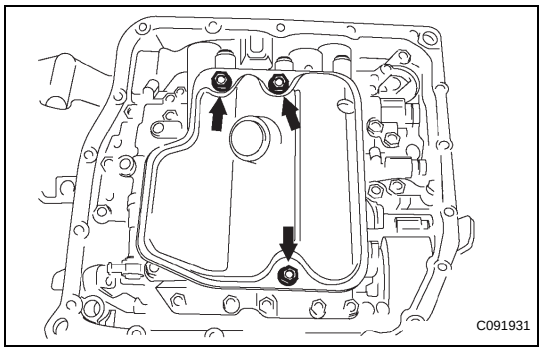

6. REMOVE VALVE BODY OIL STRAINER ASSEMBLY

(a) Remove the 3 bolts and oil strainer.

NOTICE:

Be careful when removing the oil strainer as fluid will come out.

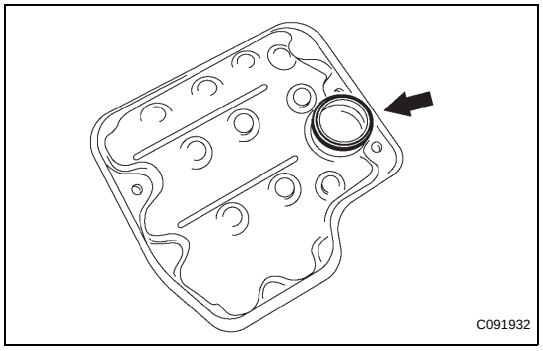

(b) Remove the O-ring from the valve body oil strainer assembly.

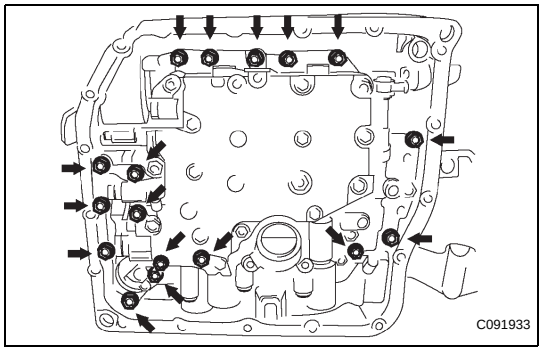

7. REMOVE TRANSMISSION VALVE BODY ASSEMBLY

(a) Support the valve body assembly and remove the 17 bolts and the transmission valve body assembly.

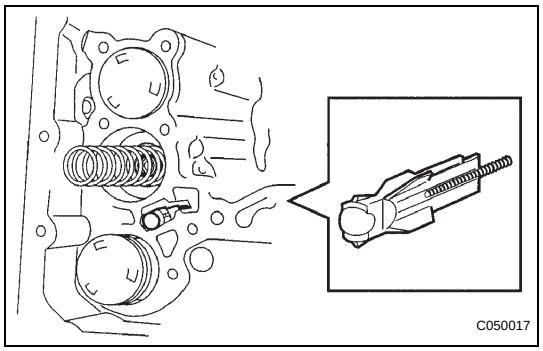

(b) Remove the check ball body and the spring.

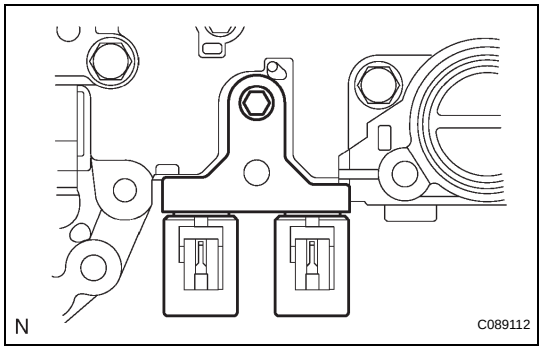

(c) Remove the bolt and lock plate from the valve body assembly.

(d) Remove the shift solenoid valve SL3 and SLT from the valve body assembly.

AX

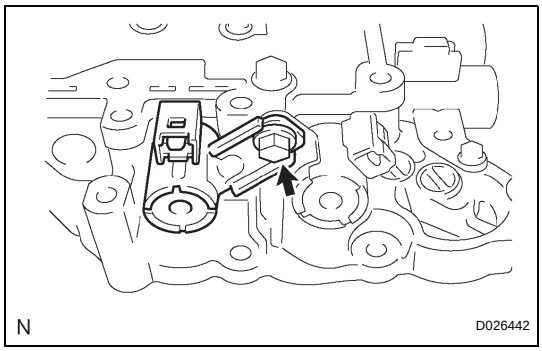

(e) Remove the bolt and shift solenoid valve S4 from the valve body assembly.

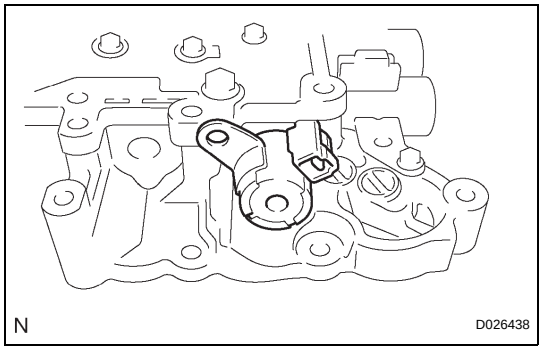

(f) Remove the shift solenoid valve SR from the valve body assembly.

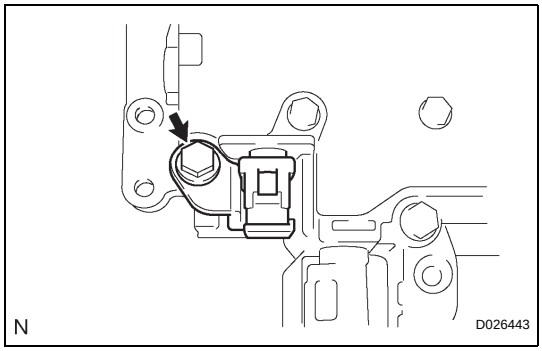

(g) Remove the bolt and shift solenoid valve DSL from the valve body assembly.

AX

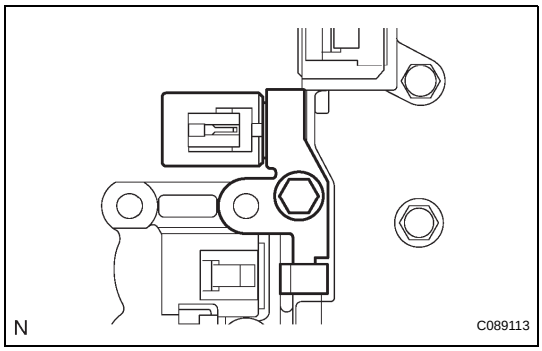

(h) Remove the bolt and shift solenoid valve SL2 from the valve body assembly.

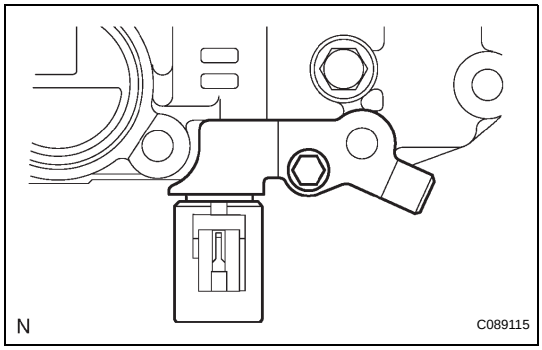

(i) Remove the bolt and shift solenoid valve SL1 from the valve body assembly.

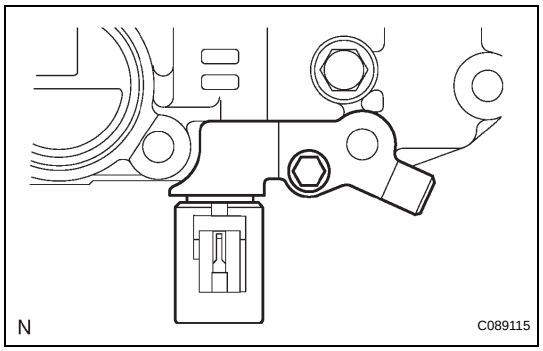

INSTALLATION

1. INSTALL TRANSMISSION VALVE BODY ASSEMBLY

(a) Install the shift solenoid valve SL1 to the valve body assembly with the bolt.
Torque: 6.6 N*m (67 kgf*cm, 58 in.*lbf)

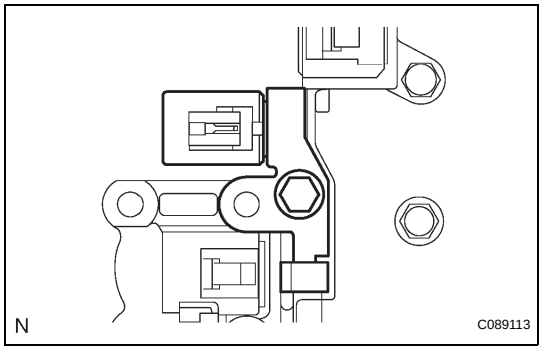

(b) Install the shift solenoid valve SL2 to the valve body assembly with the bolt.
Torque: 11 N*m (110 kgf*cm, 8 ft.*lbf)

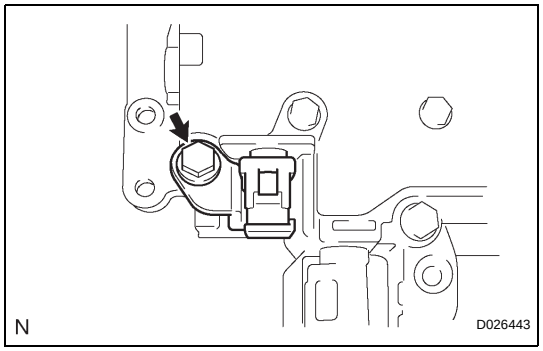

(c) Install the shift solenoid valve DSL to the valve body assembly with the bolt.
Torque: 11 N*m (110 kgf*cm, 8 ft.*lbf)

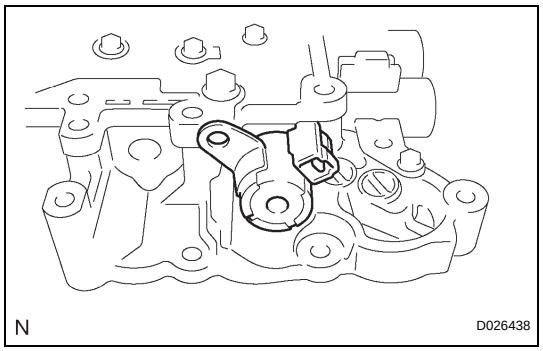

(d) Install the shift solenoid valve SR to the valve body assembly.

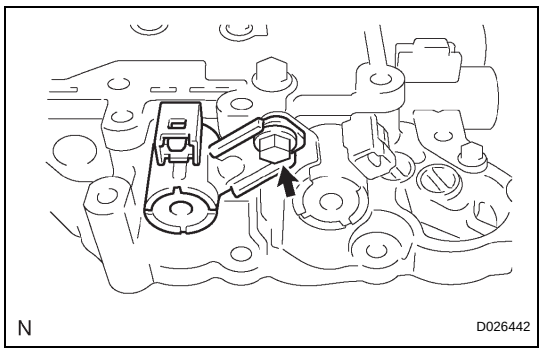

(e) Install the shift solenoid valve S4 to the valve body assembly with the bolt.
Torque: 11 N*m (110 kgf*cm, 8 ft.*lbf)

AX

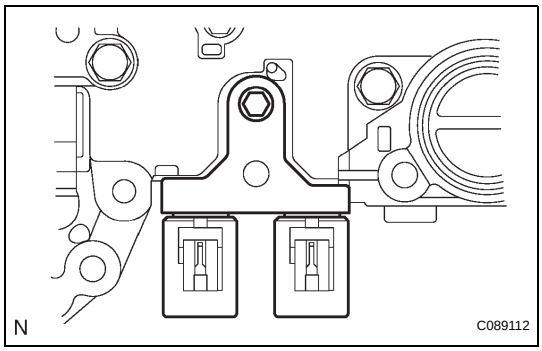

(f) Install the shift solenoid valve SL3 and SLT to the valve body assembly.

(g) Install the lock plate to the valve body assembly with the bolt.

Torque: 6.6 N*m (67 kgf*cm, 58 in.*lbf)

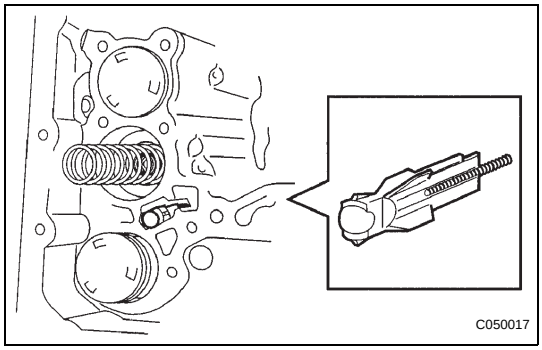

(h) Install the spring and check ball body.

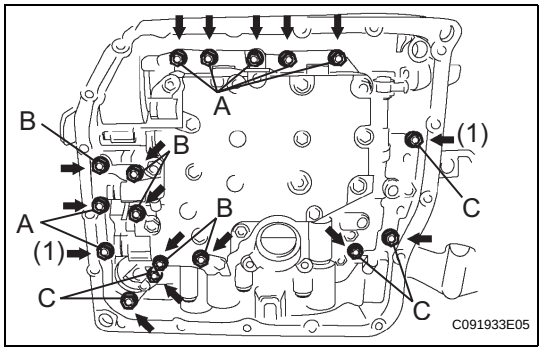

(i) Align the groove of the manual valve with the pin of the lever.

(j) Install the 17 bolts.

Torque: 11 N*m (110 kgf*cm, 8 ft.*lbf)

NOTICE:

- **Push the valve body against the accumulator piston springs and check ball body to install the valve body.**
- **First, temporarily tighten the bolts marked with (1) in the illustration because they are positioning bolts.**

Bolt length:

Bolt A:
41 mm (1.614 in.)
Bolt B:
57 mm (2.244 in.)
Bolt C:
25 mm (0.984 in.)

AX

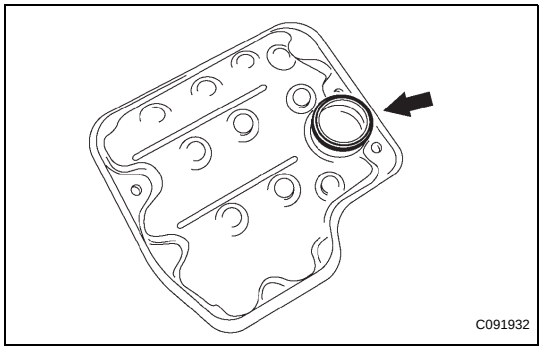

2. INSTALL VALVE BODY OIL STRAINER ASSEMBLY

(a) Coat a new O-ring with ATF.

(b) Install the O-ring to the oil strainer.

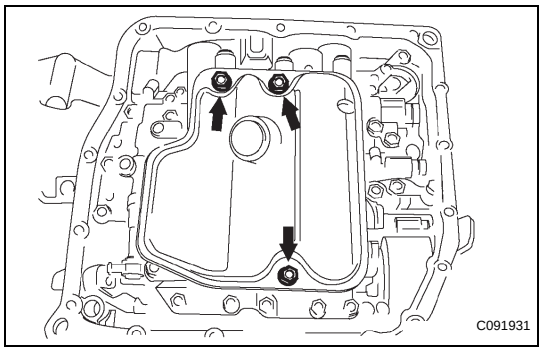

(c) Install the oil strainer with the 3 bolts.
Torque: 11 N*m (110 kgf*cm, 8 ft.*lbf)

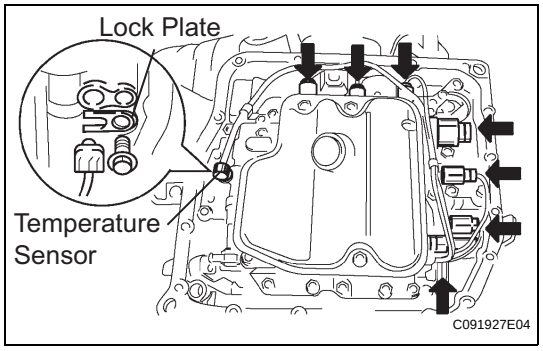

3. INSTALL TRANSMISSION WIRE
(a) Coat the O-ring with ATF.
(b) Install the ATF temperature sensor with the lock plate and bolt.
Torque: 6.6 N*m (67 kgf*cm, 58 in.*lbf)
(c) Connect the 7 shift solenoid valve connectors.

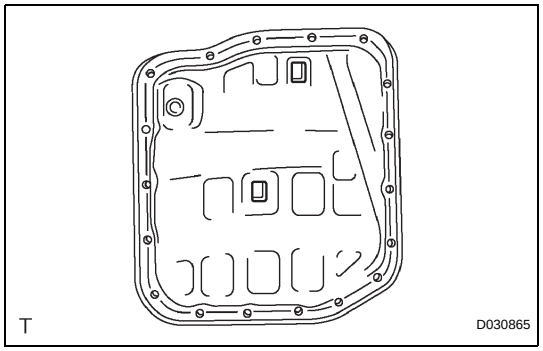

4. INSTALL AUTOMATIC TRANSAXLE OIL PAN SUB-ASSEMBLY
(a) Install the 2 magnets in the oil pan.
(b) Apply seal packing or equivalent to the 18 bolts.
Seal packing:
THREE BOND 2430 or equivalent

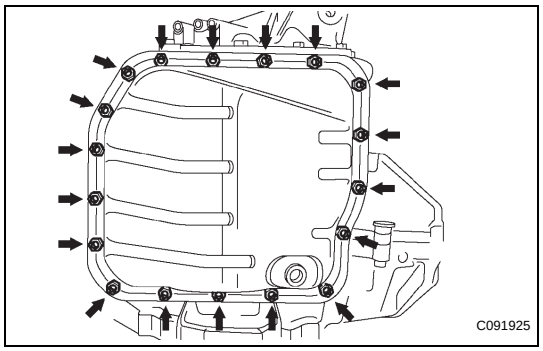

(c) Install the oil pan and new gasket with the 18 bolts to the transaxle case.
Torque: 7.8 N*m (80 kgf*cm, 69 in.*lbf)
NOTICE:
Tighten the bolts within 10 minutes of sealant application.

5. CONNECT CABLE TO NEGATIVE BATTERY TERMINAL

6. ADD AUTOMATIC TRANSAXLE FLUID

7. CHECK FLUID LEVEL IN AUTOMATIC TRANSAXLE (See page AX-123)

8. INSTALL ENGINE UNDER COVER NO.1

9. RESET MEMORY
HINT:
(See page AX-16)

AX