REMOVAL

1. **DISCONNECT BATTERY NEGATIVE TERMINAL**
2. **REMOVE FRONT DOOR SCUFF PLATE LH**
   HINT:
   (See page IP-6)
3. **REMOVE FRONT DOOR SCUFF PLATE RH**
   HINT:
   (See page IP-6)
4. **REMOVE COWL SIDE TRIM BOARD LH**
   HINT:
   (See page IP-6)
5. **REMOVE COWL SIDE TRIM BOARD RH**
   HINT:
   (See page IP-6)
6. **REMOVE INSTRUMENT PANEL FINISH PANEL SUB-ASSEMBLY LOWER LH**
   HINT:
   (See page IP-6)
7. **REMOVE GLOVE COMPARTMENT DOOR STOPPER SUB-ASSEMBLY**
   HINT:
   (See page IP-7)
8. **REMOVE GLOVE COMPARTMENT DOOR ASSEMBLY**
   HINT:
   (See page IP-7)
9. **REMOVE FLOOR CARPET COVER CENTER LH**
   HINT:
   (See page IP-8)
10. **REMOVE FLOOR CARPET COVER CENTER RH**
    HINT:
    (See page IP-8)
11. **REMOVE INSTRUMENT CLUSTER FINISH PANEL CENTER NO.1**
    HINT:
    (See page IP-8)
12. **REMOVE INSTRUMENT CLUSTER FINISH PANEL CENTER NO.2**
    HINT:
    (See page IP-8)

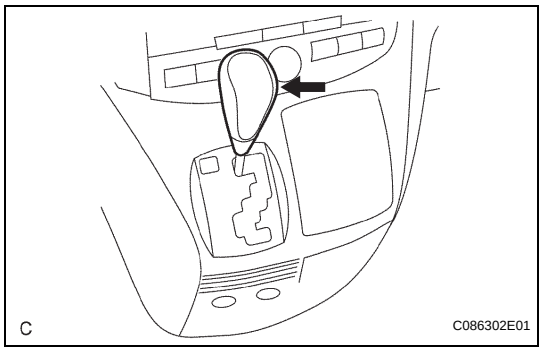

13. REMOVE SHIFT LEVER KNOB SUB-ASSEMBLY

(a) Remove the floor shift lever knob sub-assembly.

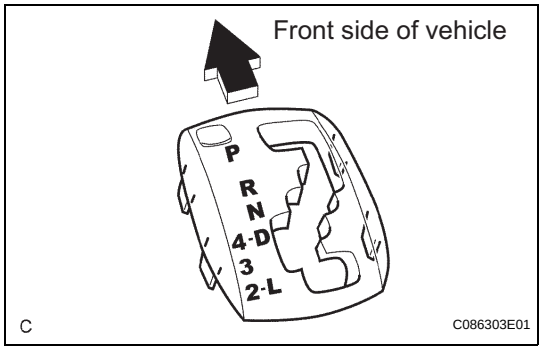

14. REMOVE POSITION INDICATOR HOUSING ASSEMBLY

(a) Using a screwdriver, remove the position indicator housing assembly from the instrument cluster finish panel assembly center.

15. REMOVE INSTRUMENT CLUSTER FINISH PANEL ASSEMBLY CENTER

HINT:

(See page IP-9)

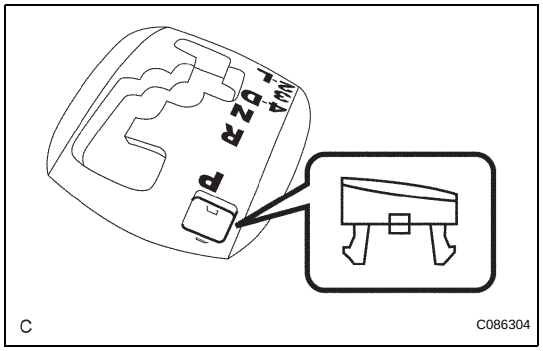

16. REMOVE SHIFT LEVER CAP

(a) Using a small screwdriver, remove the shift lever cap from the position indicator housing assembly.

17. REMOVE INSTRUMENT CLUSTER FINISH PANEL SUB-ASSEMBLY LOWER CENTER

HINT:

(See page IP-9)

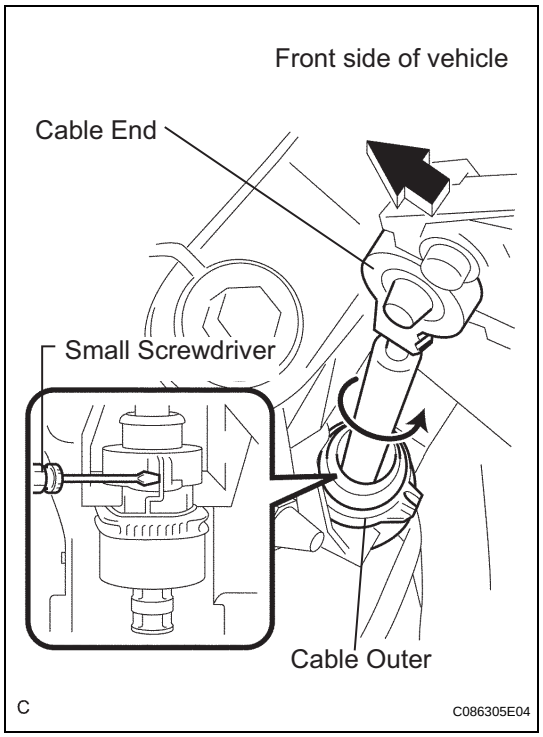

18. DISCONNECT TRANSMISSION CONTROL CABLE ASSEMBLY

(a) Using a screwdriver, disconnect the cable end from the shift lever assembly.

(b) Using a small screwdriver, disconnect the outer of transmission control cable assembly from the shift lever assembly.

AX

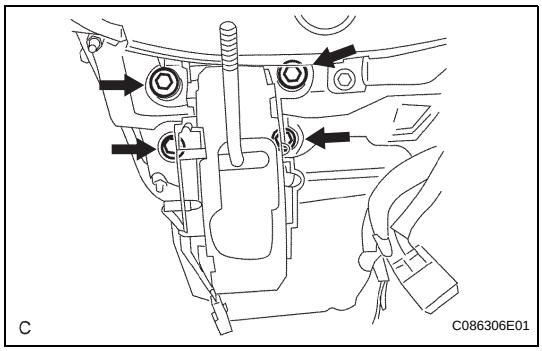

19. REMOVE SHIFT LEVER ASSEMBLY

(a) Disconnect the 2 connectors.

(b) Remove the 4 bolts and disconnect the shift lever assembly from the vehicle.

DISASSEMBLY

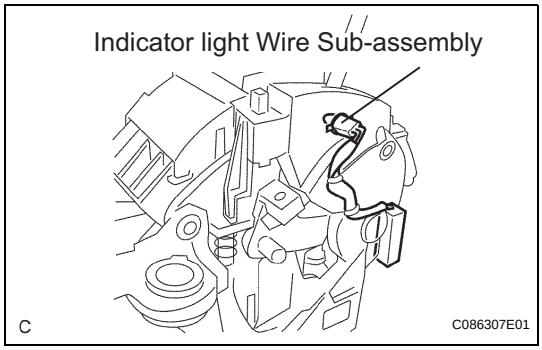

1. REMOVE INDICATOR LIGHT WIRE SUB-ASSEMBLY

(a) Remove the indicator light wire sub assembly from the position indicator light guide.

2. REMOVE POSITION INDICATOR LIGHT BULB

(a) Remove the shift position indicator light bulb from the indicator light wire sub-assembly

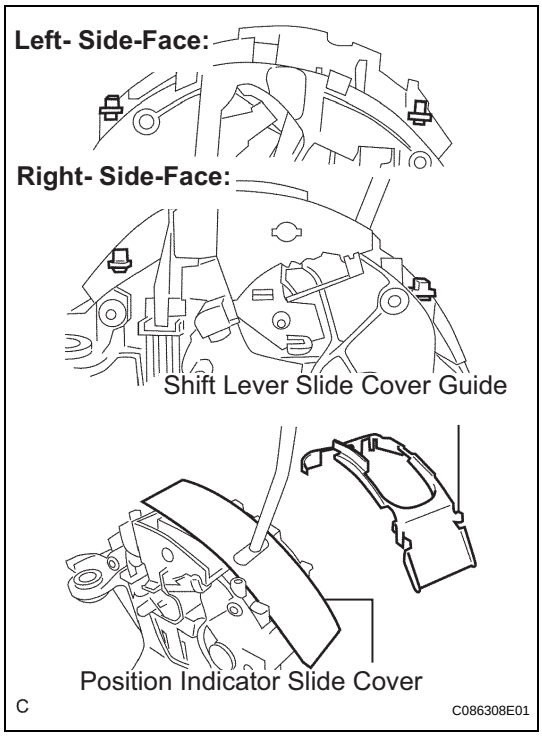

3. REMOVE POSITION INDICATOR SLIDE COVER

(a) Remove the shift lever slide cover guide from the shift lever assembly.

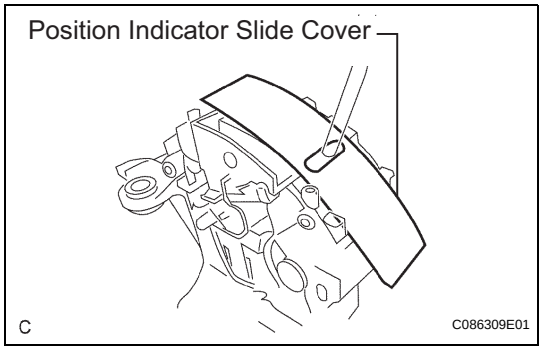

(b) Remove the position indicator slide cover from the shift lever assembly.

AX

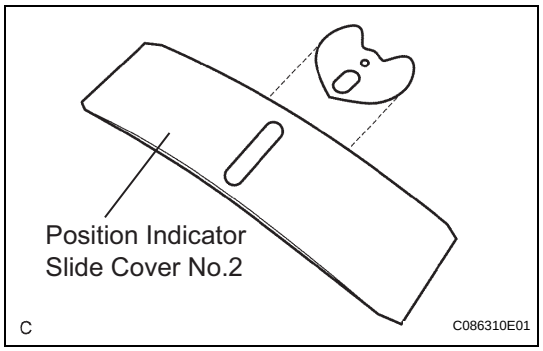

4. REMOVE POSITION INDICATOR SLIDE COVER

(a) Remove the position indicator slide cover No.2 from the position indicator slide cover.