ADJUSTMENT

1. INSPECT SHIFT LEVER POSITION

(a) When shifting from P to R position only with ignition switch ON and brake pedal, make sure that the shifting lever moves smoothly and can be moderately operated.

(b) When starting engine, make sure that the vehicle moves forward when shifting from N to D position and moves rearward when shifting to R position.

2. ADJUST SHIFT LEVER POSITION

(a) Loosen the nut on the control shaft lever.

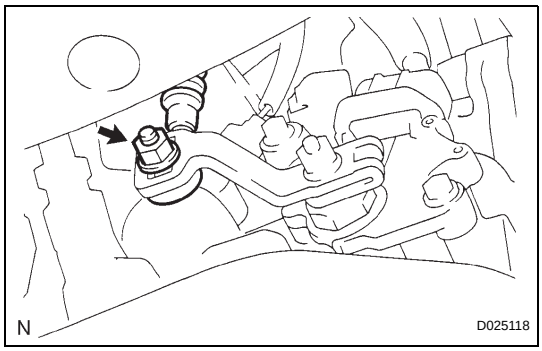

(b) Push the control shaft fully downward.

(c) Return the control shaft lever 2 notches to the N position.

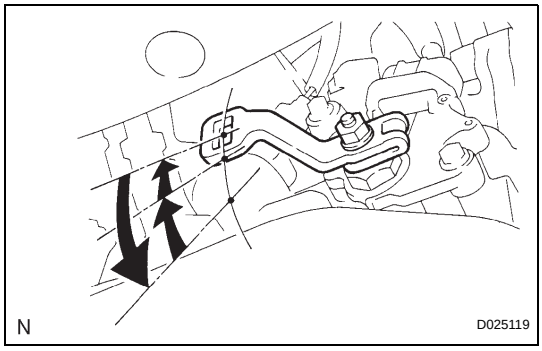

(d) While pushing the control cable end up with the shift lever in the N position, install it to the control shaft lever with the nut.

Torque: 13 N*m (132.6 kgf*cm, 9.5 ft.*lbf)

NOTICE:

- **If the control cable end is excessively pushed up, the shift lever can not be adjusted.**
- **When tightening the nut, confirm that the control cable is properly stretched.**

(e) Start the engine and make sure that the vehicle moves forward when shifting the lever from the N to D position and moves rearward when shifting it to the R position.

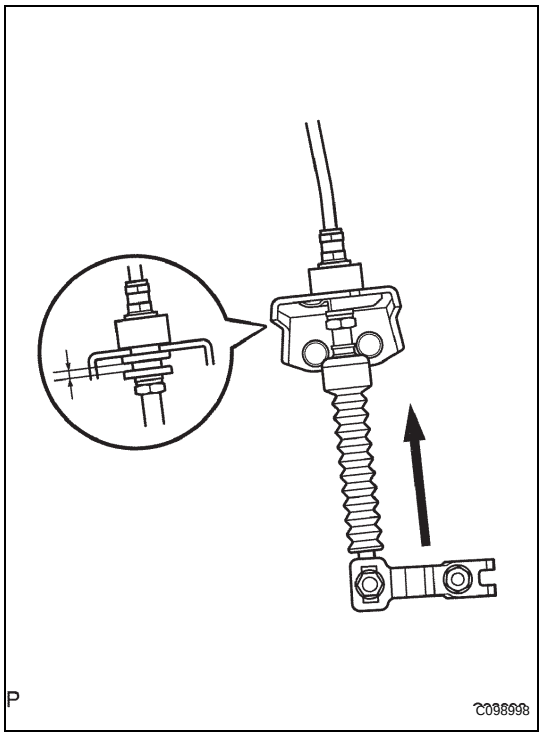

AX

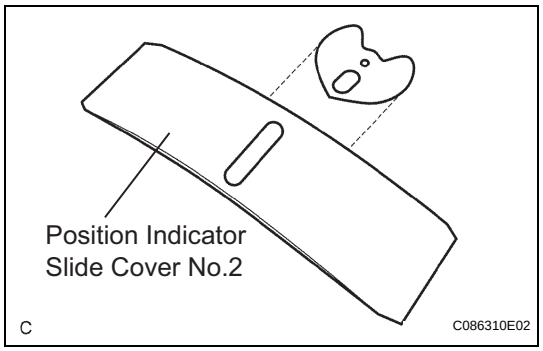

REASSEMBLY

1. INSTALL POSITION INDICATOR SLIDE COVER

(a) Install the position indicator slide cover No.2 to the position indicator slide cover.

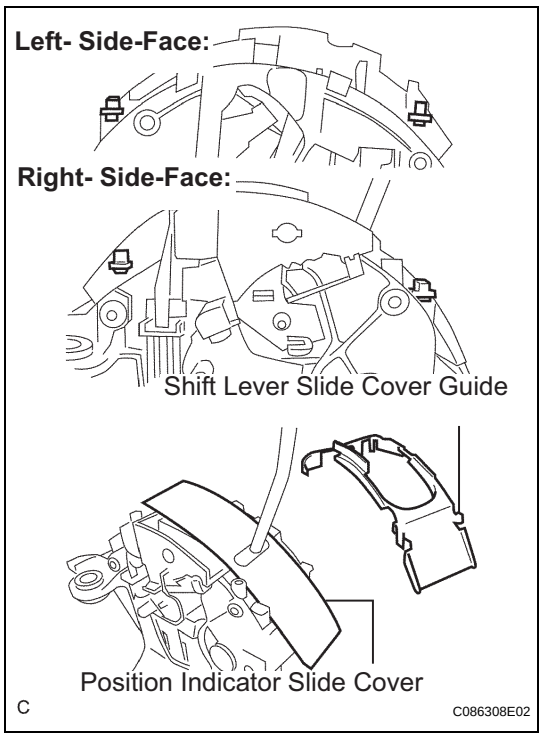

2. INSTALL POSITION INDICATOR SLIDE COVER

(a) Install the position indicator slide cover to the shift lever assembly.

(b) Install the shift lever slide cover guide to the shift lever assembly.

3. INSTALL POSITION INDICATOR LIGHT BULB

(a) Install the shift position indicator light bulb to the indicator light wire sub-assembly.

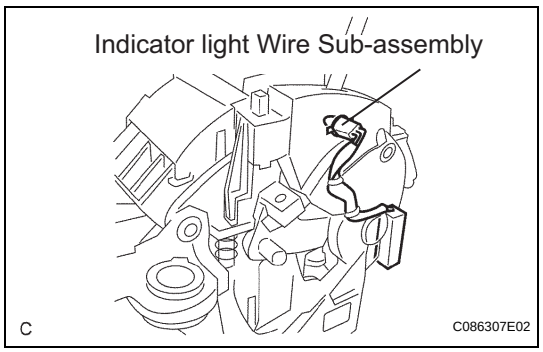

4. INSTALL INDICATOR LIGHT WIRE SUB-ASSEMBLY

(a) Install the indicator light wire sub-assembly to the shift lever assembly.

AX

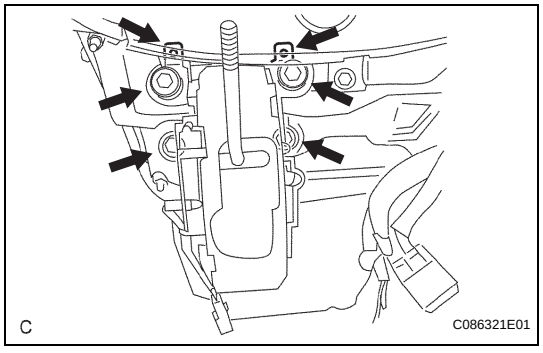

INSTALLATION

1. INSTALL SHIFT LEVER ASSEMBLY

(a) Install shift lever assembly to the vehicle with the 4 bolts.

Torque: 21 N*m (214 kgf*cm, 15 ft.*lbf)

NOTICE:

Into datum hole of shift lever into datum pin of instrument lower.

(b) Connect the 2 connectors to the shift lever assembly.

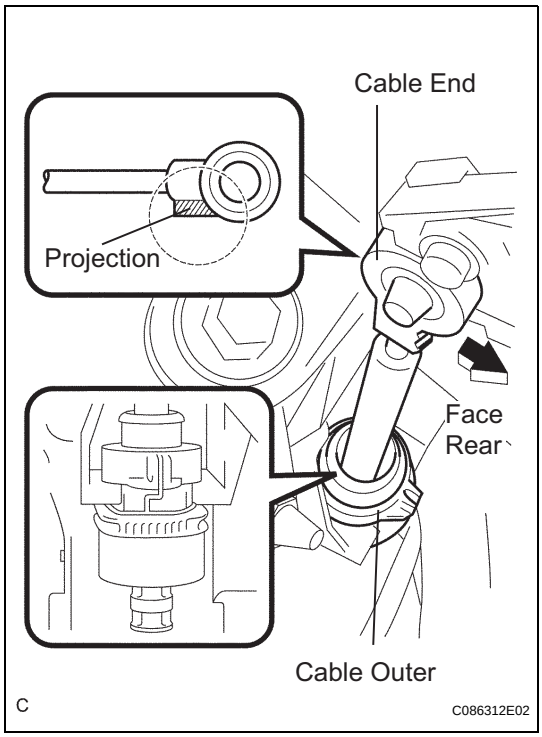

2. INSTALL TRANSMISSION CONTROL CABLE ASSEMBLY

(a) Install the cable outer to the shift lever plate

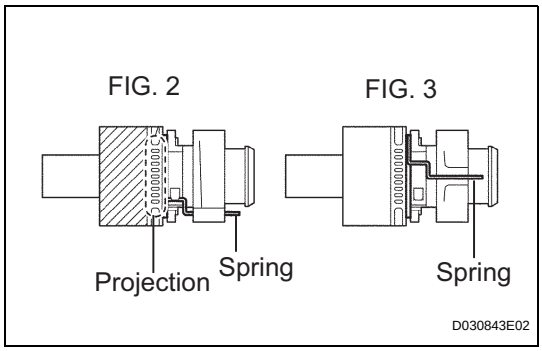

(b) When installing the transmission control cable assembly on the shift lever plate, place the projection to the shift lever plate (FIG. 2).
Confirm that the spring in the shift cable outer has moved to the position (FIG. 3) shown in the illustration.
Confirm that the shift cable is installed on the shift lever plate properly.
NOTICE:
- **To prevent torsion of the inner cable, the projection on the eye end should face rear.**
- **Push the cable end to the bottom of the pin.**

AX

3. INSTALL INSTRUMENT CLUSTER FINISH PANEL SUB-ASSEMBLY LOWER CENTER

HINT:
(See page IP-15)

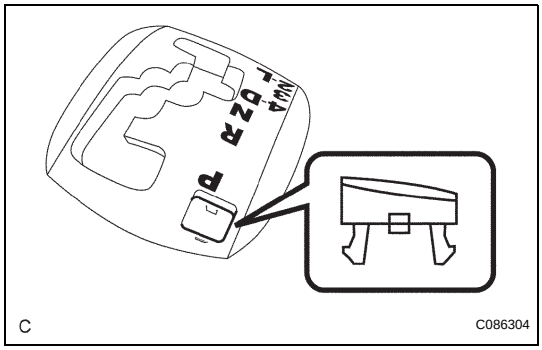

4. INSTALL SHIFT LEVER CAP

(a) Install the shift lever cap to the floor shift position indicator housing assembly.

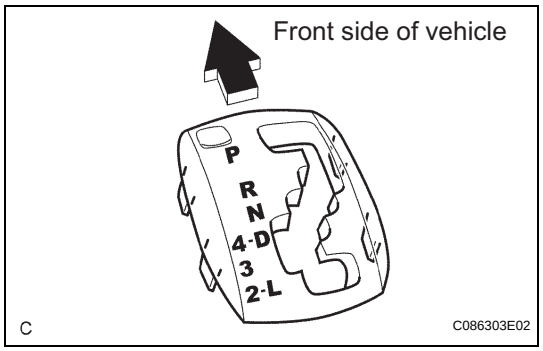

5. **INSTALL POSITION INDICATOR HOUSING ASSEMBLY**
   (a) install the position indicator housing assembly to the instrument cluster finish panel assembly center.

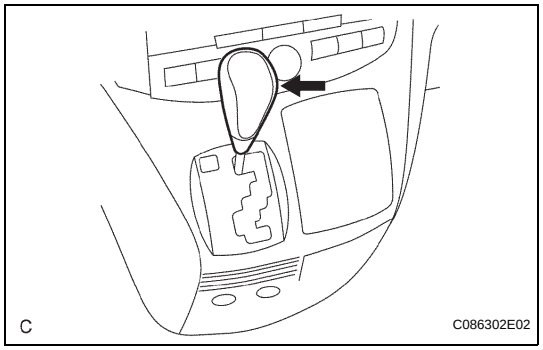

6. **INSTALL SHIFT LEVER KNOB SUB-ASSEMBLY**
   (a) install the shift lever knob sub-assembly.

7. **ADJUST SHIFT LEVER POSITION**
   HINT:
   (See page AX-149)

8. **INSPECT SHIFT LEVER POSITION**
   HINT:
   (See page AX-148)

9. **INSPECT KEY INTER LOCK OPERATION**
   HINT:
   (See page AX-142)

10. **INSPECT SHIFT LOCK OPERATION**
    HINT:
    (See page AX-142)

11. **INSPECT SHIFT LOCK RELEASE BUTTON OPERATION**
    HINT:
    (See page AX-142)