REMOVAL

1. **REMOVE ENGINE ASSEMBLY WITH TRANSAXLE**
   HINT:
   (See page EM-26)

2. **REMOVE FRONT DRIVE SHAFT ASSEMBLY LH**
   HINT:
   (See page DS-6)

3. **REMOVE FRONT DRIVE SHAFT ASSEMBLY RH**
   HINT:
   (See page DS-7)

4. **REMOVE TRANSMISSION CONTROL CABLE CLAMP**
   (a) Remove the bolt and the transmission control cable clamp.

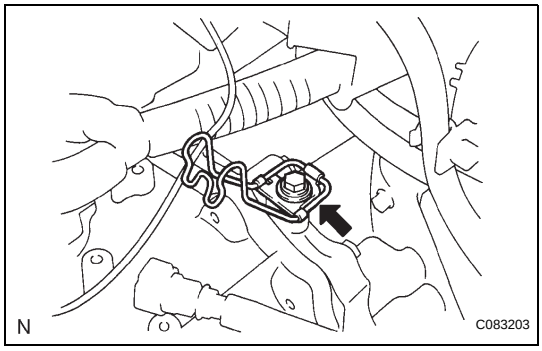

5. **REMOVE WIRE HARNESS CLAMP**
   (a) Disconnect the wire harnesses from the clamp.
   (b) Remove the 3 bolts and 2 clamps.

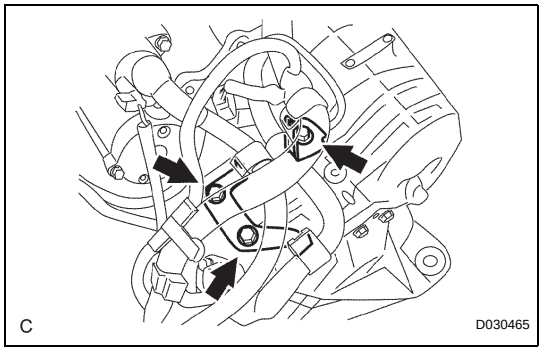

AX

6. **DISCONNECT WIRE HARNESS**
   (a) Remove the bolt and disconnect the wire harness.

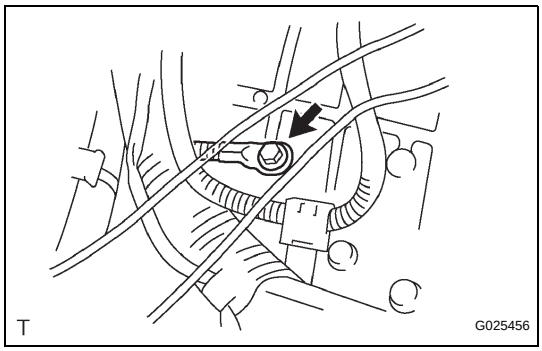

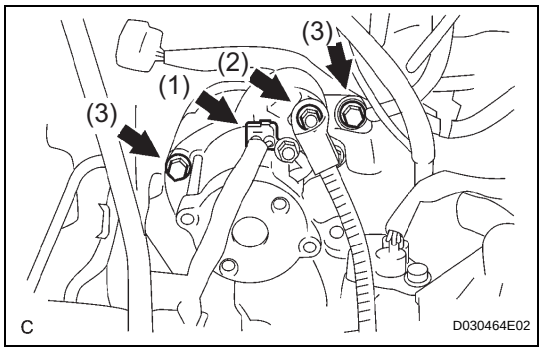

7. REMOVE STARTER ASSEMBLY

(a) Disconnect the connector (1).
(b) Remove the nut (2) and disconnect the starter wire.
(c) Remove the 2 bolts (3) and starter assembly.

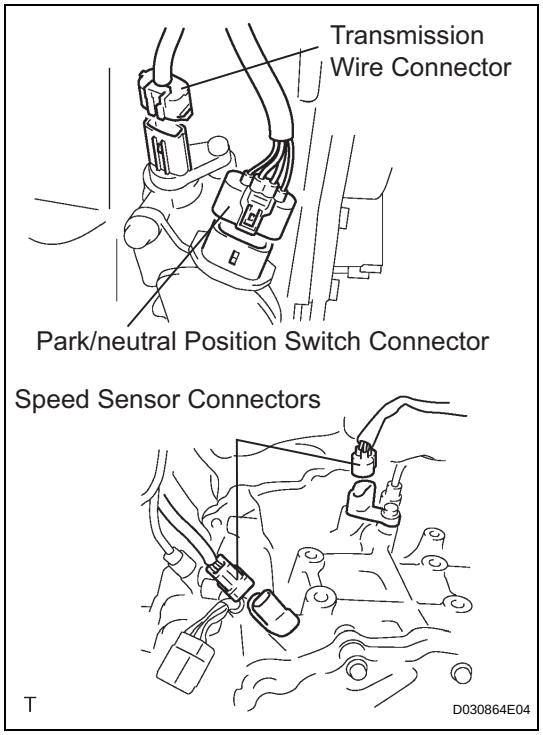

8. DISCONNECT CONNECTORS

(a) Disconnect the transmission wire connector.
(b) Disconnect the park/neutral position switch connector.
(c) Disconnect the 2 speed sensor connectors.

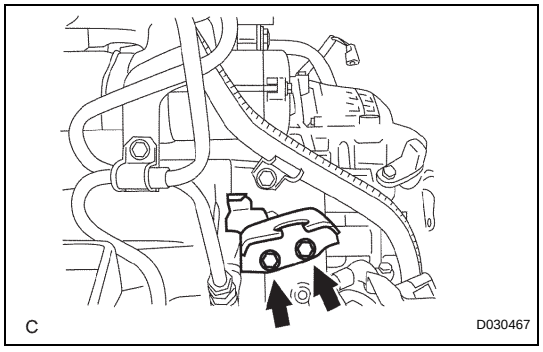

9. REMOVE TRANSMISSION CONTROL CABLE BRACKET NO.1

(a) Remove the bolt and automatic transmission oil cooler tube clamp.
(b) Remove the 2 bolts and transmission control cable bracket No.1.

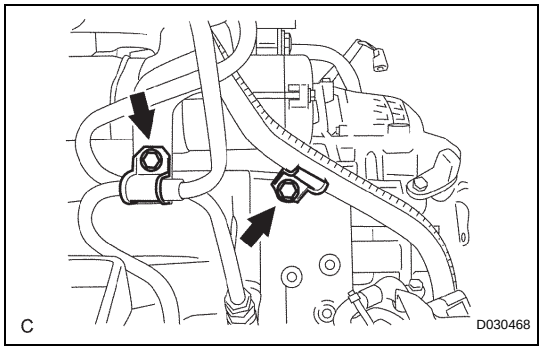

10. REMOVE TRANSMISSION OIL FILLER TUBE SUB-ASSEMBLY

(a) Remove the ATF level gauge.
(b) Disconnect the wire harnesses 2 clamps from the oil filler tube.
(c) Remove the 2 bolts and oil filler tube.
(d) Remove the O-ring from the oil filler tube.

AX

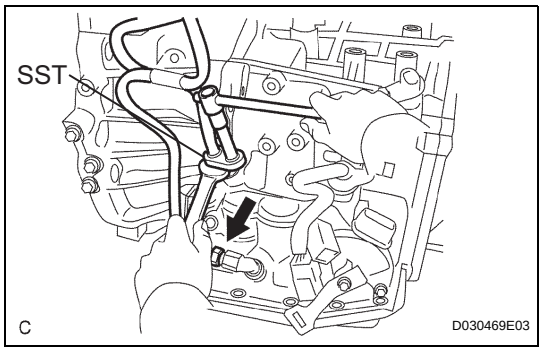

11. REMOVE OIL COOLER INLET TUBE NO.1

(a) Using SST and a wrench, disconnect the oil cooler inlet tube No.1.
SST 09023-12701

12. REMOVE OIL COOLER OUTLET TUBE NO.1

(a) Using SST and a wrench, disconnect the oil cooler outlet tube No.1.
SST 09023-12701

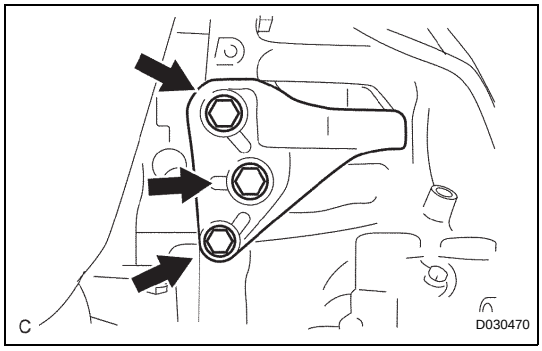

13. REMOVE ENGINE MOUNTING BRACKET FRONT

(a) Remove the 3 bolts and engine mounting bracket front.

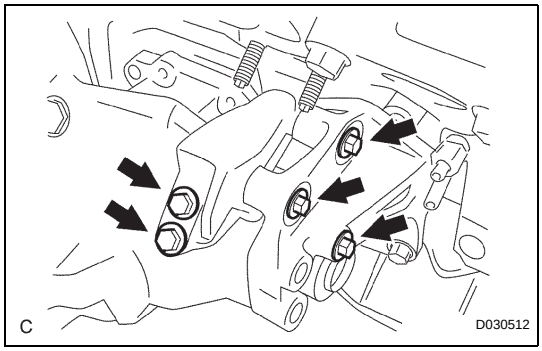

14. REMOVE TRANSFER STIFFENER PLATE RH

(a) Remove the 5 bolts and transfer stiffener plate RH.

AX

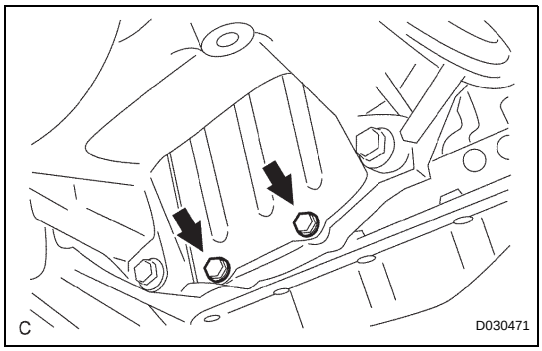

15. REMOVE AUTOMATIC TRANSAXLE W/TRANSFER

(a) Remove the 2 bolts and flywheel housing under cover.

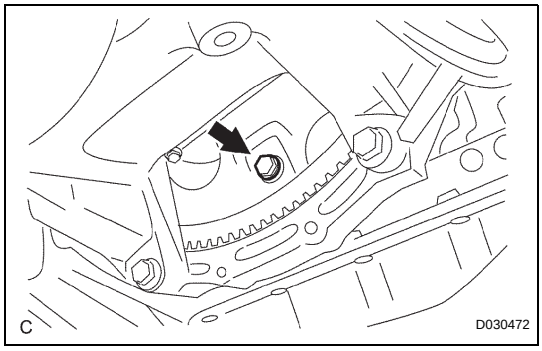

(b) Turn the crankshaft to gain access and remove the 6 bolts while holding the crankshaft pulley bolt with a wrench.
HINT:
There will be one green colored bolt.

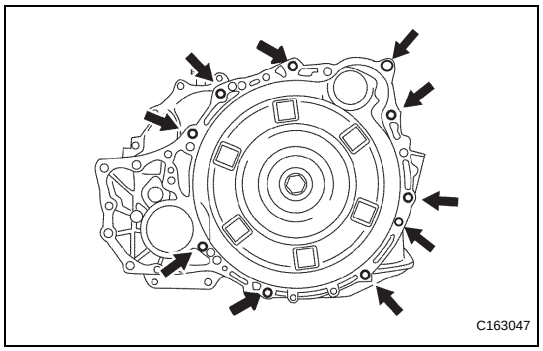

(c) Remove the 10 bolts.
(d) Separate and remove the automatic transaxle w/ transfer.

16. REMOVE TRANSFER ASSEMBLY
HINT:
(See page TF-8)

17. REMOVE TORQUE CONVERTER CLUTCH ASSEMBLY

18. INSPECT TORQUE CONVERTER CLUTCH ASSEMBLY
HINT:
(See page AX-172)

INSTALLATION

1. INSTALL TORQUE CONVERTER CLUTCH ASSEMBLY

(a) Install the torque converter clutch to the automatic transaxle.

(b) Using vernier calipers and a straight edge, measure the dimension "A" between the transaxle fitting part of the engine and the converter fitting part of the drive plate (*1).

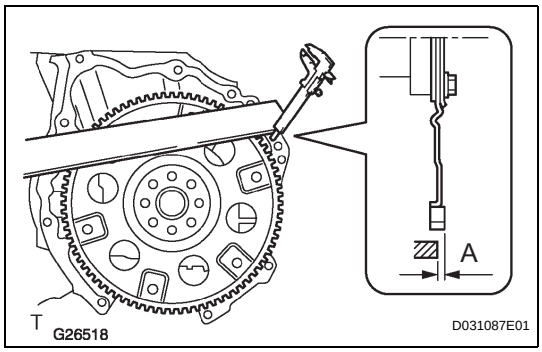

(c) Using vernier calipers and a straight edge, measure the dimension "B" shown in the illustration and check that "B" is greater than "A" (measured in step (*1)).

Standard:

A + 1 mm (0.03937 in.) or more

NOTICE:

Remember to minus the thickness of the straight edge.

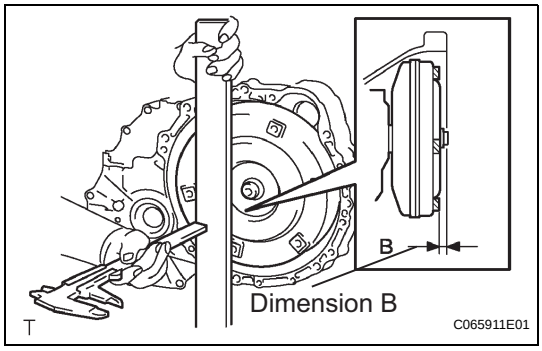

2. INSTALL TRANSFER ASSEMBLY

HINT:

(See page TF-9)

3. INSTALL AUTOMATIC TRANSAXLE W/TRANSFER

(a) Install the automatic transaxle w/transfer with the 10 bolts to the engine.

Torque: Bolt A

64 N*m (650 kgf*cm, 47 ft.*lbf)

Bolt B

46 N*m (470 kgf*cm, 34 ft.*lbf)

Bolt C

43 N*m (439 kgf*cm, 32 ft.*lbf)

(b) Apply a few drops of adhesive to each of 2 threads on the tip of the 6 torque converter clutch mounting bolts.

Adhesive:

Part No. 08833-00070, THREE BOND 1324 or equivalent

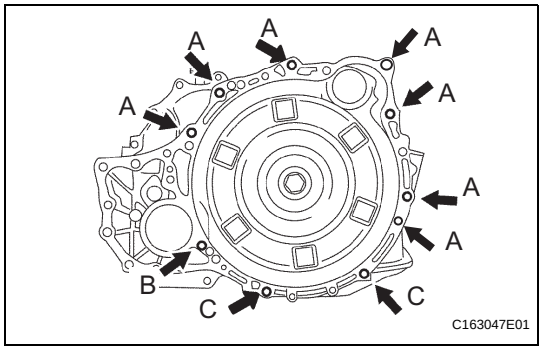

AX

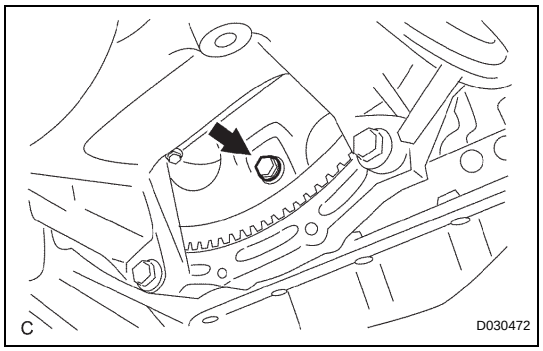

(c) Install the 6 torque converter clutch mounting bolts.
Torque: 41 N*m (413 kgf*cm, 30 ft.*lbf)
NOTICE:
First install the black colored bolt, and then the remaining 5 bolts.

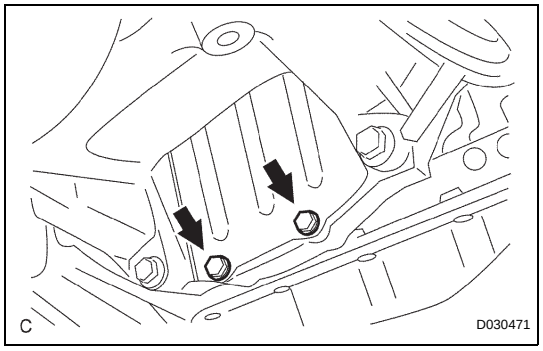

(d) Install the flywheel housing under cover to the automatic transaxle with the 2 bolt.
Torque: 7.8 N*m (80 kgf*cm, 69 in.*lbf)

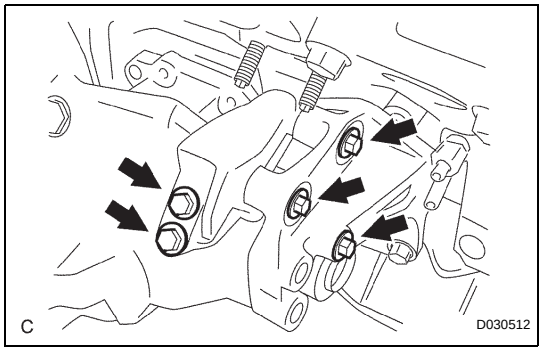

4. INSTALL TRANSFER STIFFENER PLATE RH

(a) Install the transfer stiffener plate RH with 5 bolts to the transfer and engine mounting bracket RR.
Torque: 34 N*m (350 kgf*cm, 25 ft.*lbf)

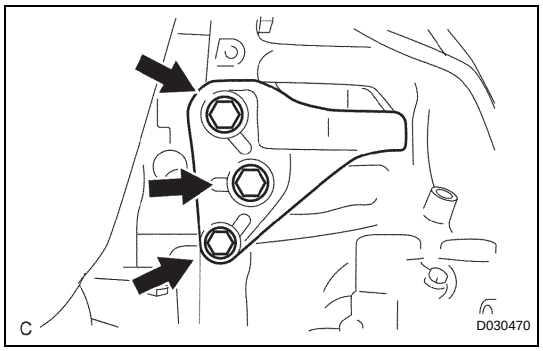

5. INSTALL ENGINE MOUNTING BRACKET FRONT

(a) Install the engine mounting bracket front to the automatic transaxle with the 3 bolts.
Torque: 64 N*m (653 kgf*cm, 47 ft.*lbf)

6. INSTALL TRANSMISSION OIL FILLER TUBE SUB-ASSEMBLY

(a) Coat a new O-ring with ATF, and install it to the transmission oil filler tube sub-assembly.

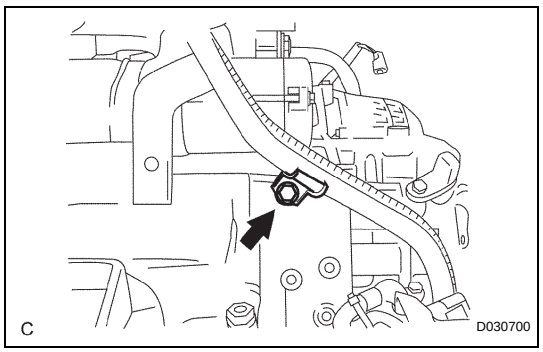

(b) Install the transmission oil filler tube sub-assembly and bolt to the automatic transaxle.
Torque: 5.5 N*m (56 kgf*cm, 49 in.*lbf)
(c) Connect the 2 clamps to the oil filler tube.
(d) Install the ATF level gauge.

7. INSTALL OIL COOLER INLET TUBE NO.1

(a) Temporarily install the oil cooler outlet tube No.1.
(b) Temporarily install the oil cooler inlet tube No.1.

AX

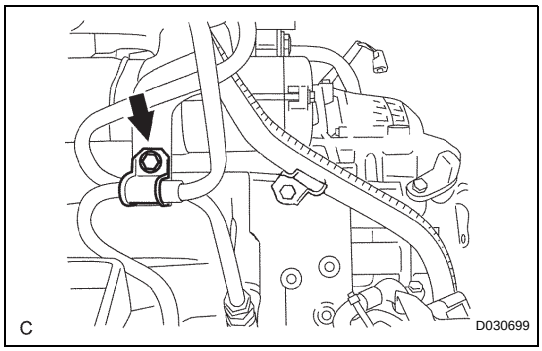

(c) Install the oil cooler tube clamp and bolt.
Torque: 5.5 N*m (56 kgf*cm, 49 in.*lbf)

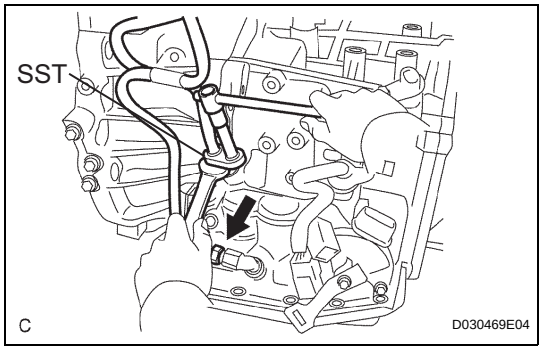

(d) Using SST and a wrench, tighten the oil cooler inlet tube No.1.
SST 09023-12701
Torque: 34 N*m (347 kgf*cm, 25 ft.*lbf)

8. INSTALL OIL COOLER OUTLET TUBE NO.1

(a) Using SST and a wrench, tighten the oil cooler outlet tube No.1.
SST 09023-12701
Torque: 34 N*m (347 kgf*cm, 25 ft.*lbf)

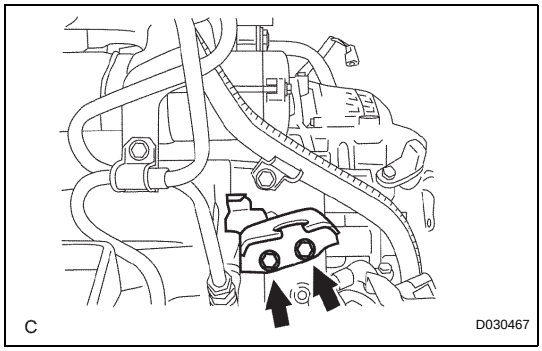

9. INSTALL TRANSMISSION CONTROL CABLE BRACKET NO.1

(a) Install the control cable bracket No.1 with the 2 bolts.
Torque: 12 N*m (122 kgf*cm, 9 ft.*lbf)

AX

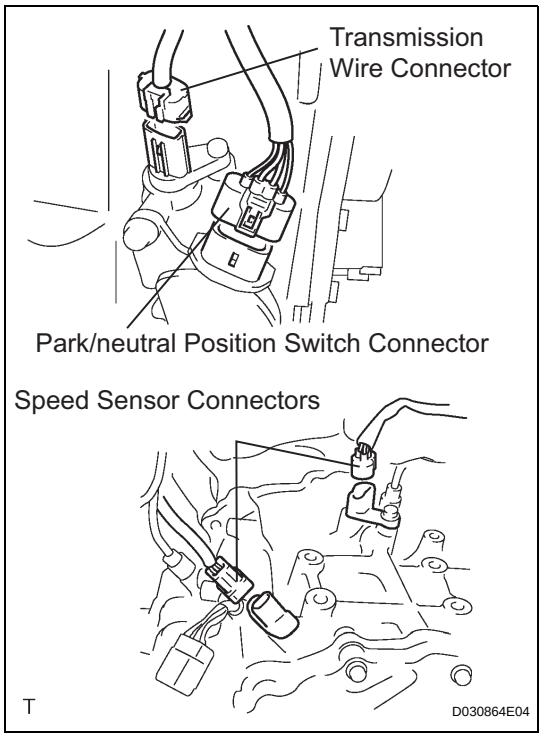

10. CONNECT CONNECTORS

(a) Connect the transmission wire connector.
(b) Connect the park/neutral position switch connector.
(c) Connect the 2 speed sensor connectors.

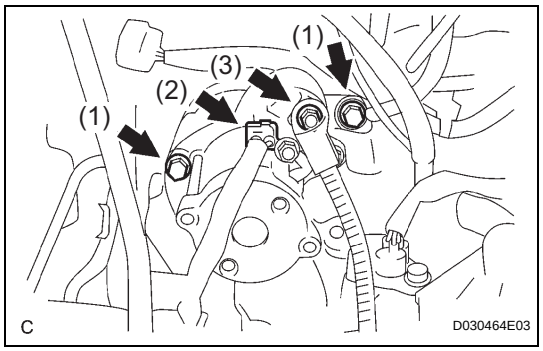

11. INSTALL STARTER ASSEMBLY

(a) Install the starter assembly with the 2 bolts (1).
Torque: 37 N*m (377 kgf*cm, 27 ft.*lbf)

(b) Connect the connector (2).

(c) Connect the starter wire with the nut (3).
Torque: 9.8 N*m (100 kgf*cm, 87 in.*lbf)

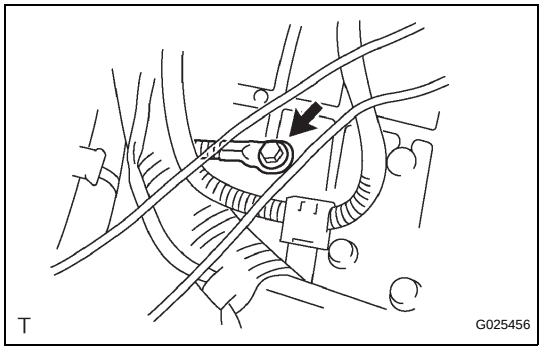

12. CONNECT WIRE HARNESS

(a) Connect the wire harness with the bolt.
Torque: 13 N*m (133 kgf*cm, 10 ft.*lbf)

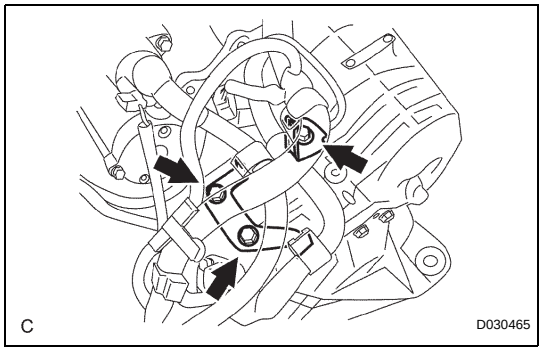

13. INSTALL WIRE HARNESS CLAMP

(a) Install the 2 clamps and 3 bolts.
Torque: 8.4 N*m (86 kgf*cm, 74 in.*lbf)

(b) Connect the wire harnesses to the clamps.

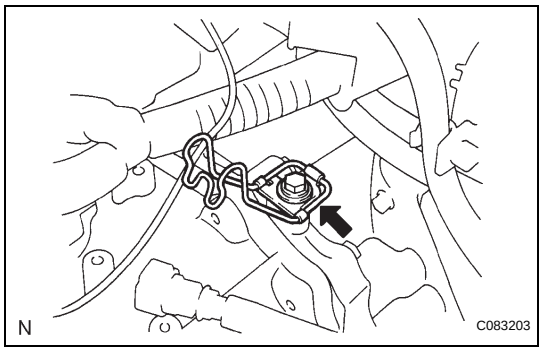

14. INSTALL TRANSMISSION CONTROL CABLE CLAMP

(a) Install the transmission control cable clamp with the bolt.
Torque: 12 N*m (122 kgf*cm, 9 ft.*lbf)

15. INSTALL FRONT DRIVE SHAFT ASSEMBLY LH

HINT:
(See page DS-17)

16. INSTALL FRONT DRIVE SHAFT ASSEMBLY RH

HINT:
(See page DS-17)

17. INSTALL ENGINE ASSEMBLY WITH TRANSAXLE

HINT:
(See page EM-44)

18. RESET MEMORY

HINT:
(See page AX-16)