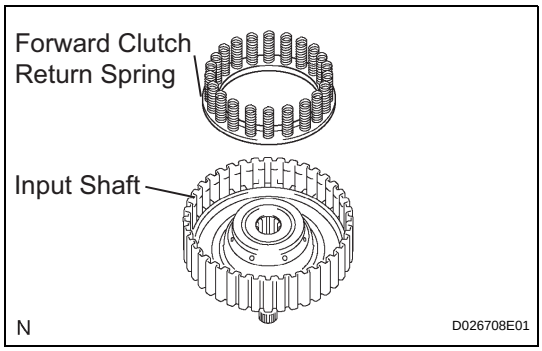

(d) Remove the forward clutch return spring from the input shaft.

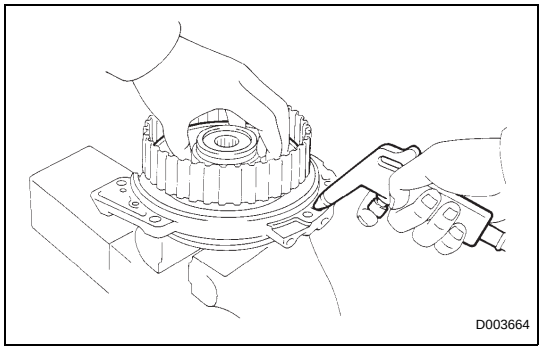

4. REMOVE FORWARD CLUTCH RETURN SPRING SUB-ASSEMBLY

(a) Place the forward clutch drum onto the oil pump.

(b) Holding the forward clutch piston by hand, apply compressed air (392 kPa, 4.0 kgf/cm^2, 57 psi) to the oil pump to remove the forward clutch piston.
HINT:
When the piston cannot be removed as it is slanted, blow air again with the protruding side pushed, or remove the piston using the needle nose pliers with vinyl tape on the tip.

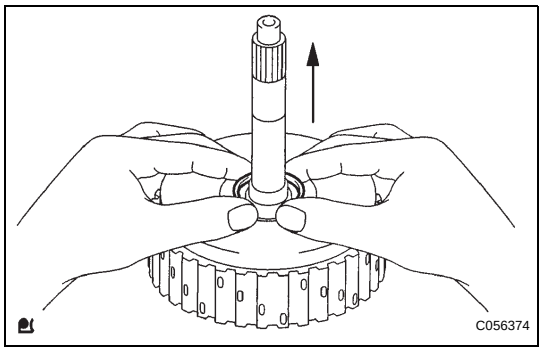

5. REMOVE INPUT SHAFT OIL SEAL RING

(a) Remove the input shaft oil seal ring from the input shaft.

AX

INSPECTION

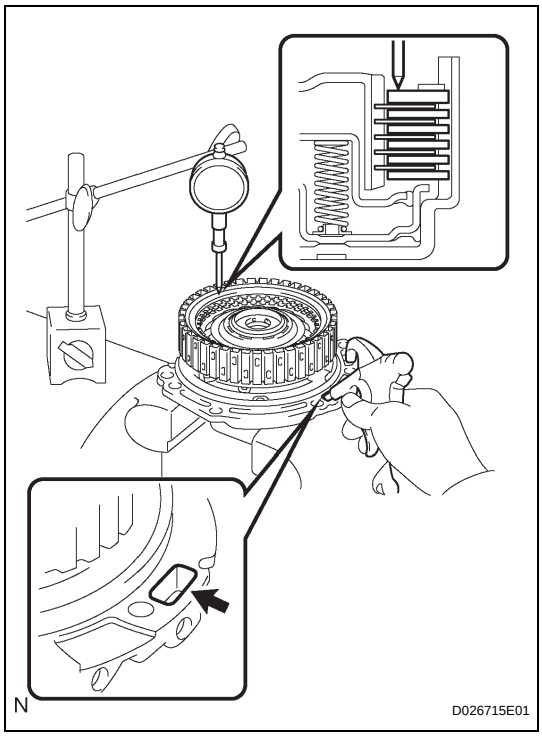

1. INSPECT PACK CLEARANCE OF FORWARD CLUTCH

(a) Install the forward clutch on the oil pump.
NOTICE:
Be careful not to damage the oil seal ring of oil pump.

(b) Using a dial indicator, measure the forward clutch pack clearance while applying and releasing compressed air (392 kPa, 4.0 kgf/cm^2, 57 psi).
Pack clearance:
1.00 to 1.25 mm (0.0394 to 0.4921 in.)
If the clearance is not as specified, inspect the discs, plates and flange.
HINT:
If the opening is large, cover it with a shop rug or a piece of cloth to prevent the compressed air from being released.

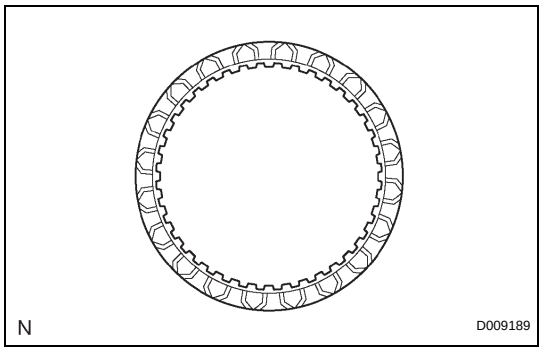

2. INSPECT FORWARD MULTIPLE DISC CLUTCH DISC

(a) Check if the sliding surface of the disc, plate and flange are worn or burnt.
If necessary, replace them.
HINT:
- If the lining of the disc comes off or discolors, or if a part of the groove is worn, replace all discs.
- Before installing new discs, immerse them in ATF for at least 15 minutes.

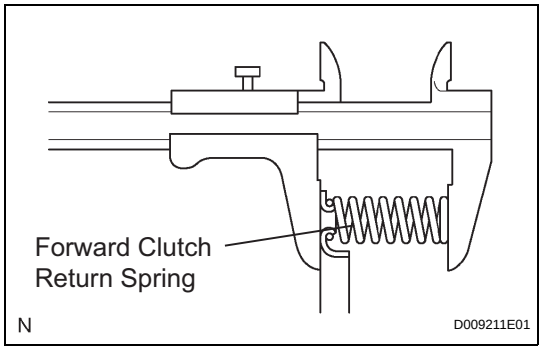

3. INSPECT FORWARD CLUTCH RETURN SPRING SUB-ASSEMBLY

(a) Using vernier calipers, measure the free length of the spring together with the spring seat.
Standard free length:
26.74 mm (1.0528 in.)

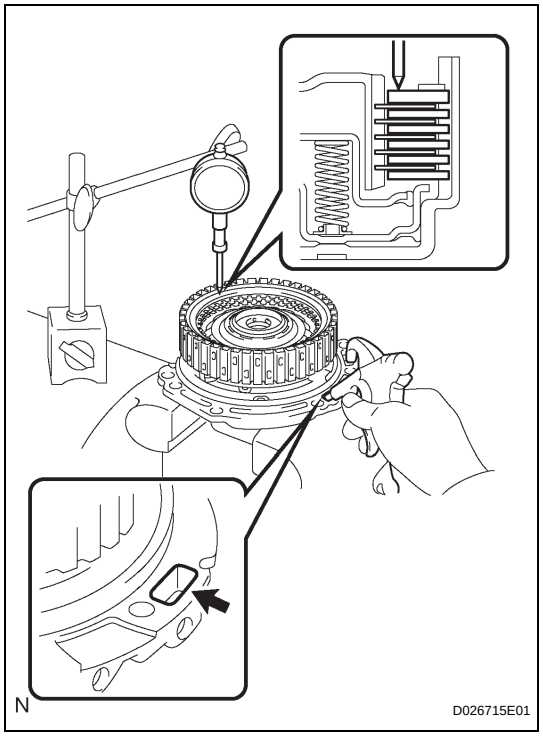

4. INSPECT PACK CLEARANCE OF FORWARD CLUTCH

(a) Using a dial indicator, measure the forward clutch pack clearance while applying and releasing compressed air (392 kgf/cm^2, 4.0 kPa, 57 psi).
Pack clearance:
1.00 to 1.25 mm (0.0394 to 0.4921 in.)
If the piston stroke is less than the minimum, parts may be assembled incorrectly. Check and reassemble the parts again.
If the clearance is not as specified, select another flange.
HINT:
There are 5 different thicknesses of flanges available.
Flange thickness: mm (in.)

No.	Thickness	No.	Thickness
1	3.00 (0.1181)	4	3.45 (0.1358)
2	3.15 (0.1240)	5	3.60 (0.1417)
3	3.30 (0.1299)	-	-

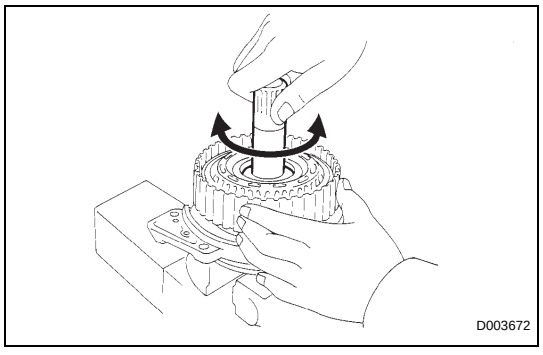

5. INSPECT FORWARD MULTIPLE DISC CLUTCH DISC

(a) Check if the disc lightly rotates when rotating the forward clutch assembly after inserting the multiple disc clutch into it.
NOTICE:
Do not place the forward clutch assembly in a vise.

AX