FORWARD CLUTCH

COMPONENTS

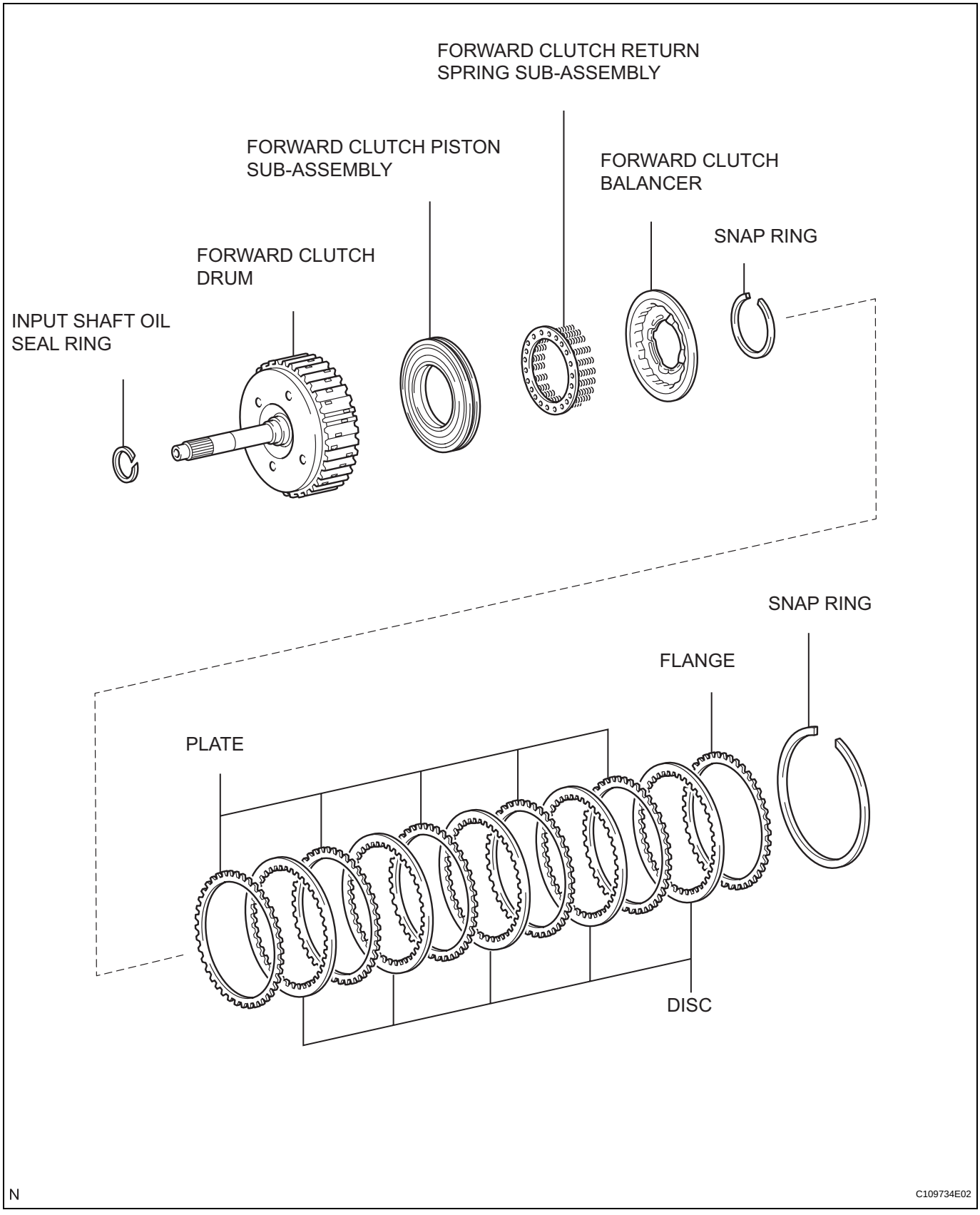

DISASSEMBLY

1. INSPECT PACK CLEARANCE OF FORWARD CLUTCH

HINT:

(See page AX-246)

2. REMOVE FORWARD MULTIPLE DISC CLUTCH DISC

(a) Using a screwdriver, remove the snap ring.

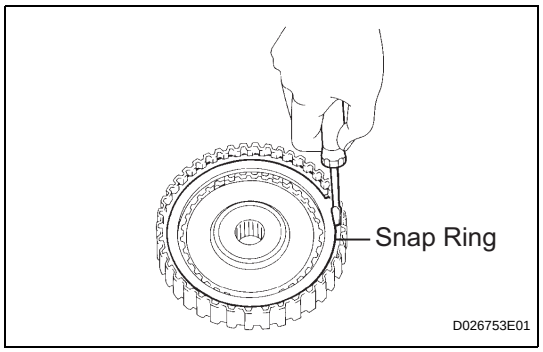

(b) Remove the flange, 5 discs and 5 plates from the input shaft assembly.

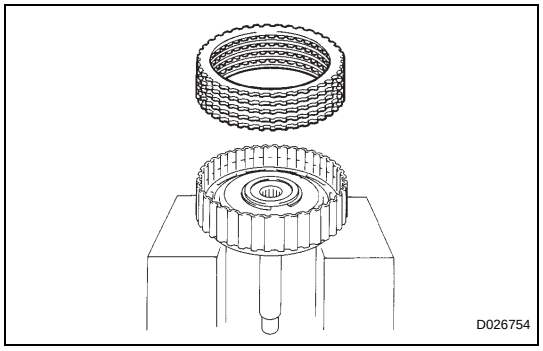

3. REMOVE FORWARD CLUTCH RETURN SPRING SUB-ASSEMBLY

(a) Place SST on the spring retainer and compress the return spring with a press.

(b) Using a snap ring expander, remove the snap ring.

NOTICE:

- **Stop the press when the spring seat is lowered 1 to 2 mm (0.039 to 0.078 in.) from the snap ring groove, preventing the spring seat from being deformed.**
- **Do not expand the snap ring excessively.**

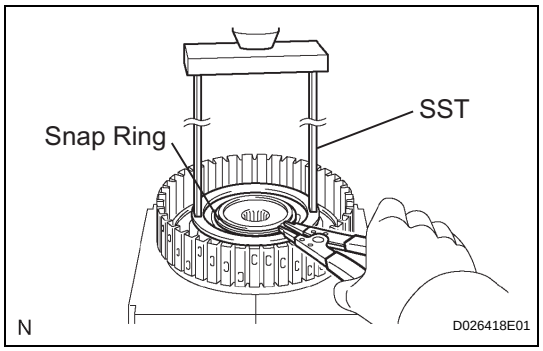

(c) Remove the clutch balancer from the input shaft.

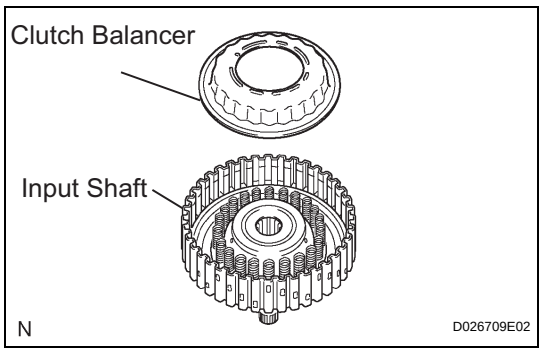

AX