DIRECT CLUTCH

COMPONENTS

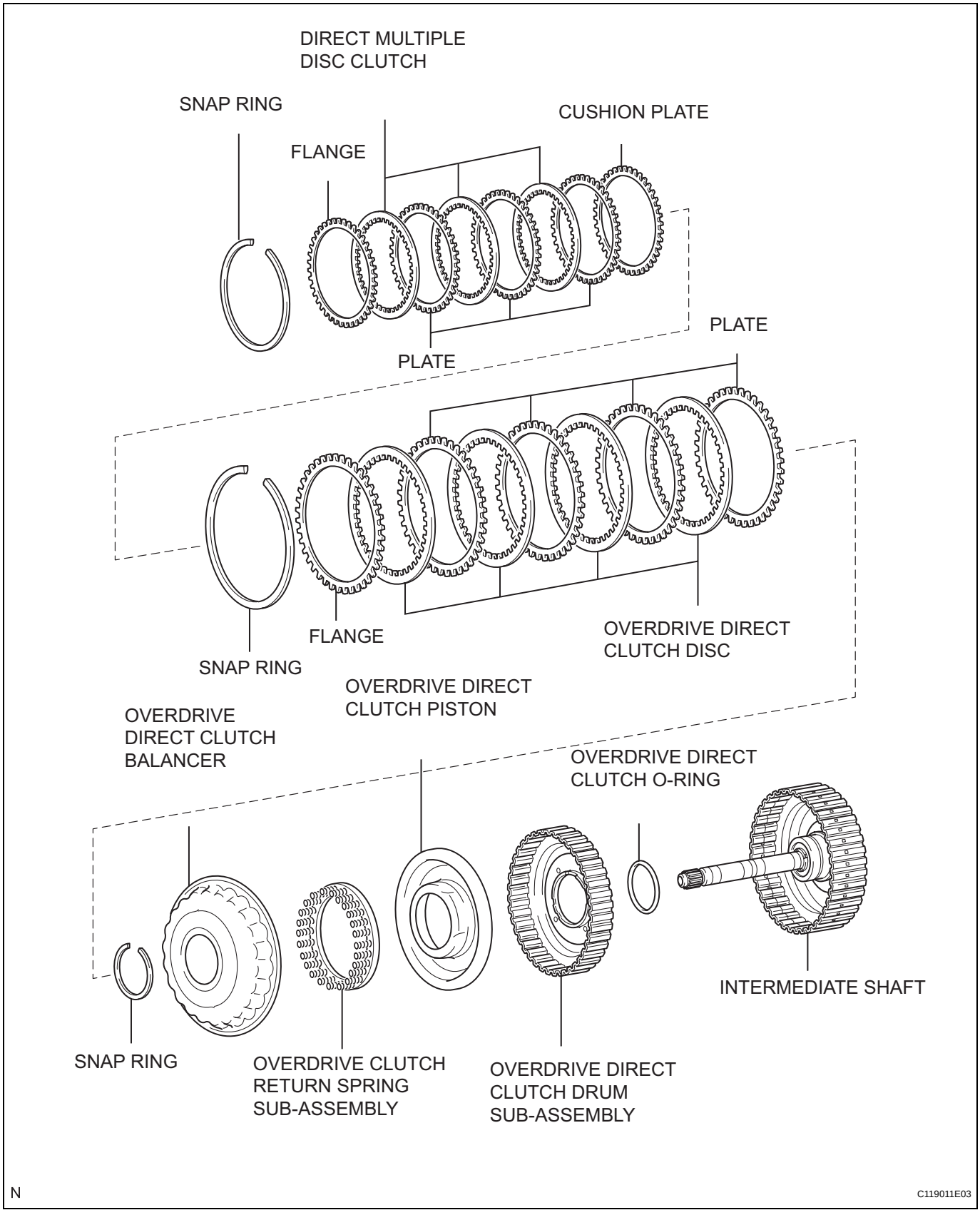

N

C119011E03

AX

DISASSEMBLY

1. INSPECT PACK CLEARANCE OF REVERSE CLUTCH

HINT:

(See page AX-253)

2. INSPECT PACK CLEARANCE OF DIRECT CLUTCH AND OVERDRIVE CLUTCH

HINT:

(See page AX-253)

3. REMOVE DIRECT MULTIPLE DISC CLUTCH

(a) Using a screwdriver, remove the snap ring from the intermediate shaft.

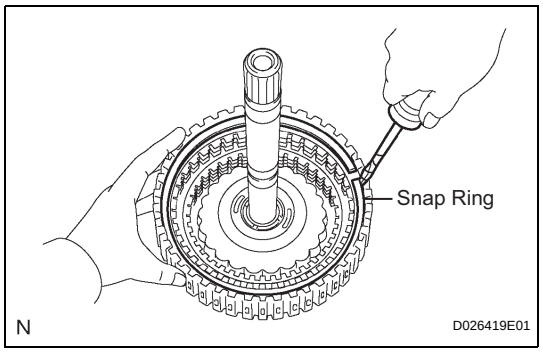

(b) Remove the flange, 3 discs, 3 plates and cushion plate from the intermediate shaft.

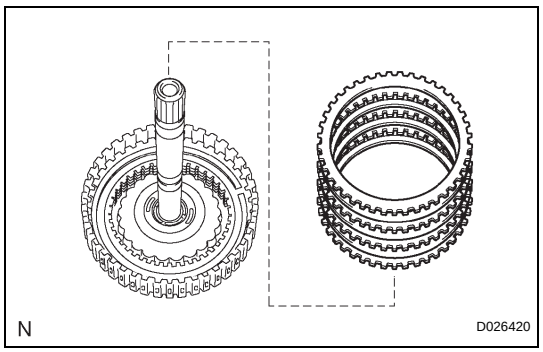

4. REMOVE OVERDRIVE DIRECT CLUTCH DISC

(a) Using a screwdriver, remove the snap ring from the intermediate shaft.

(b) Remove the flange, 4 discs and 4 plates from the intermediate shaft.

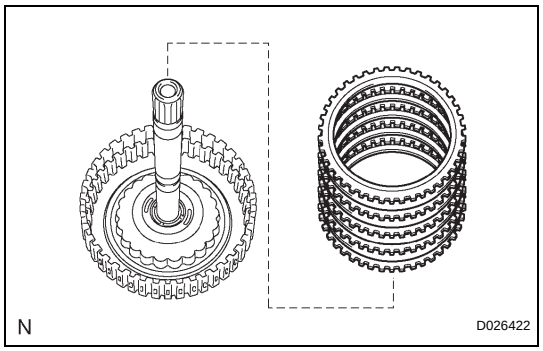

5. REMOVE OVERDRIVE CLUTCH RETURN SPRING SUB-ASSEMBLY

(a) Place SST on the clutch balancer and compress the spring with a press.

SST 09387-00020

(b) Using a snap ring expander, remove the snap ring from the direct clutch drum.

NOTICE:

- **Stop the press when the spring seat is lowered to the place 1 to 2 mm (0.039 to 0.078 in.) from the snap ring groove.**

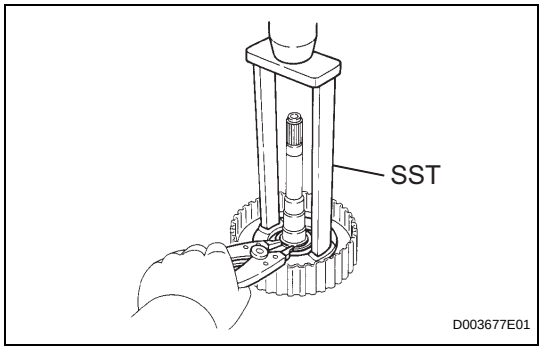

AX

- **This prevents the spring seat from being deformed.**
- **Do not expand the snap ring excessively.**

(c) Remove the clutch balancer from the direct clutch drum.

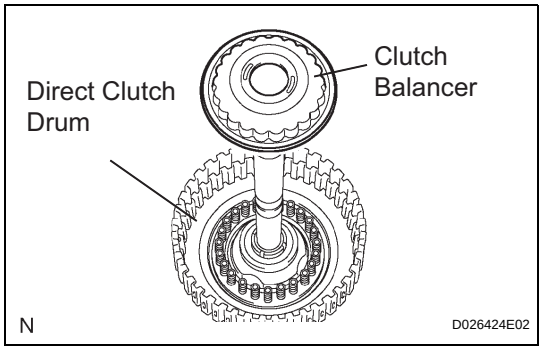

(d) Remove the overdrive clutch return spring from the direct clutch drum.

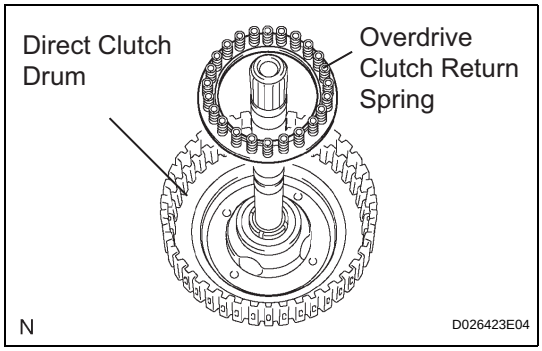

6. REMOVE OVERDRIVE DIRECT CLUTCH PISTON

(a) Install the intermediate shaft on the transaxle rear cover.

(b) Holding the direct clutch piston with your hand, apply compressed air (392 kPa, 4.0 kgf/cm^2, 57 psi) to the transaxle rear cover to remove the direct clutch piston.

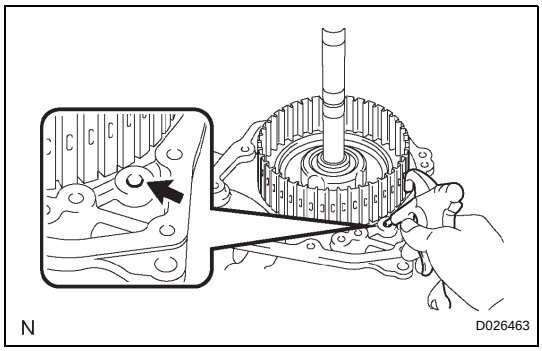

7. REMOVE OVERDRIVE DIRECT CLUTCH DRUM SUB-ASSEMBLY

(a) Holding the direct clutch drum by hand, apply compressed air (392 kPa, 4.0 kgf/cm^2, 57 psi) to the transaxle rear cover to remove the direct clutch drum.

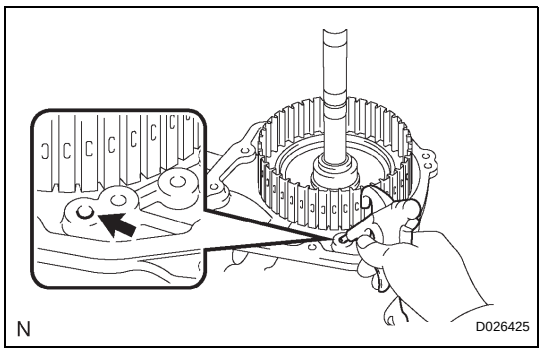

AX

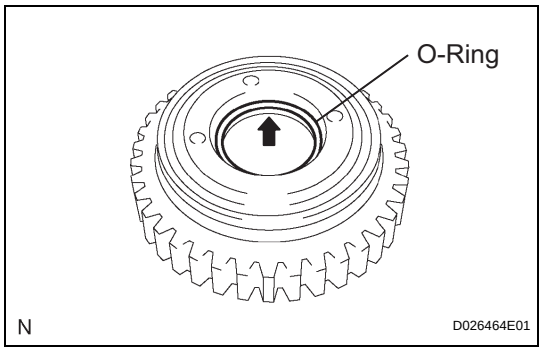

8. REMOVE OVERDRIVE DIRECT CLUTCH O-RING

(a) Using a screwdriver, remove the O-ring from the direct clutch drum.

INSPECTION

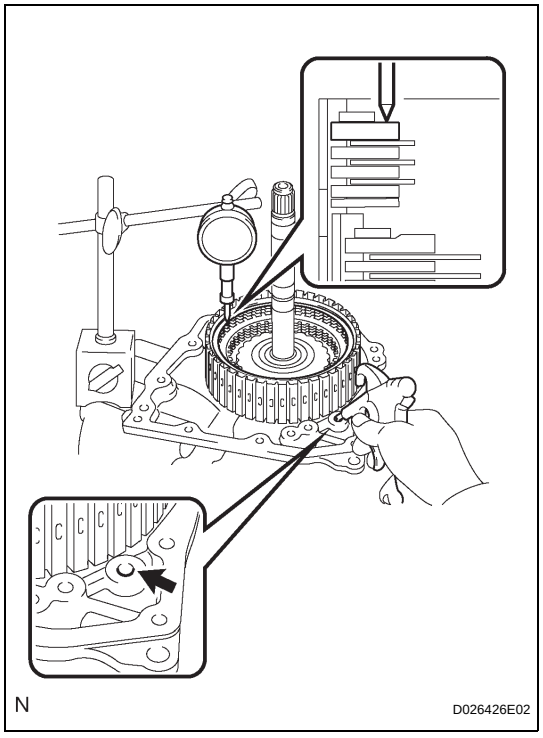

1. INSPECT PACK CLEARANCE OF REVERSE CLUTCH

(a) Install the intermediate shaft and needle roller bearing onto the transaxle rear cover.

(b) Using a dial indicator, measure the reverse clutch pack clearance while applying and releasing compressed air (392 kPa, 4.0 kgf/cm^2, 57 psi).

Pack clearance:

0.60 to 0.82 mm (0.02362 to 0.03228 in.)

If the pack clearance is not as specified, inspect the discs, plates and flange.

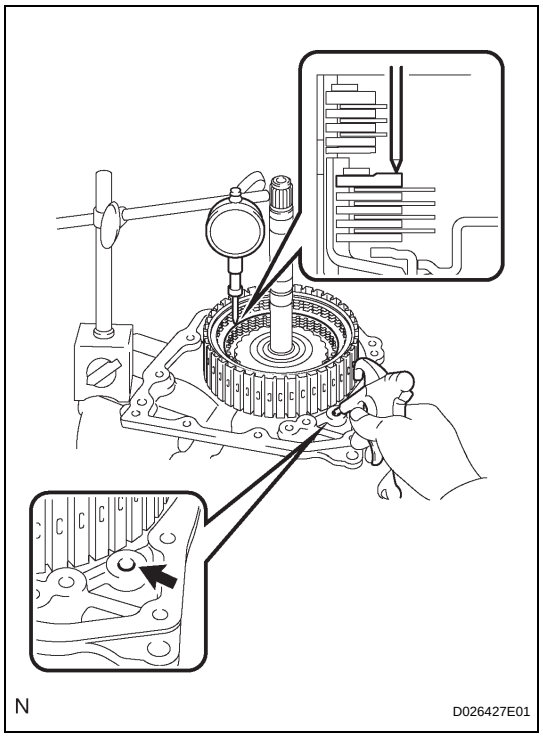

2. INSPECT PACK CLEARANCE OF DIRECT CLUTCH AND OVERDRIVE CLUTCH

(a) Using a dial indicator, measure the direct clutch and overdrive clutch pack clearance while applying and releasing compressed air (392 kPa, 4.0 kgf/cm^2, 57 psi).

Pack clearance:

0.61 to 0.83 mm (0.02401 to 0.03268 in.)

If the pack clearance is not as specified, inspect the discs, plates and flange.

AX

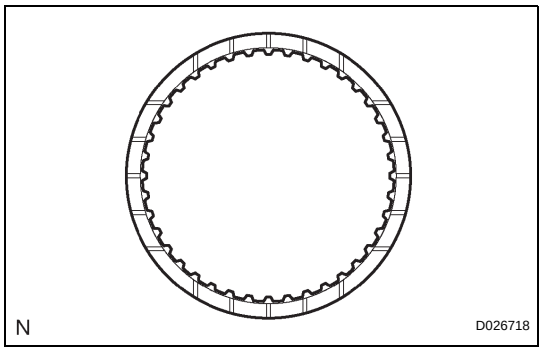

3. INSPECT DIRECT MULTIPLE DISC CLUTCH DISC

(a) Check if the sliding surfaces of the disc, plate and flange are worn or burnt.
If necessary, replace them.
HINT:
- If the lining of the disc comes off or discolors, or if a part of the groove is worn, replace all discs.
- Before installing new discs, immerse them in ATF for at least 15 minutes.

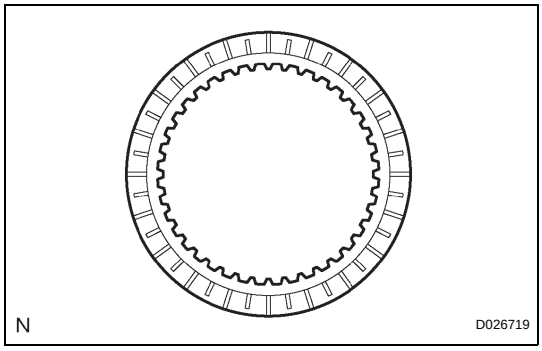

4. INSPECT OVERDRIVE DIRECT CLUTCH DISC

(a) Check if the sliding surface of the disc, plate and flange are worn or burnt.
If necessary, replace them.
HINT:
- If the lining of the disc comes off or discolors, or if a part of the groove is worn, replace all discs.
- Before installing new discs, immerse them in ATF for at least 15 minutes.

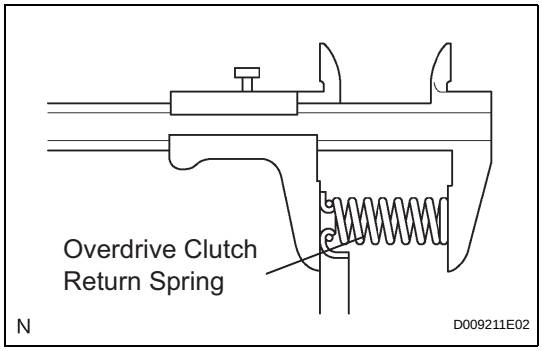

5. INSPECT OVERDRIVE CLUTCH RETURN SPRING SUB-ASSEMBLY

(a) Using vernier calipers, measure the free length of the spring together with the spring seat.
Standard free length:
25.91 mm (1.0201 in.)

AX

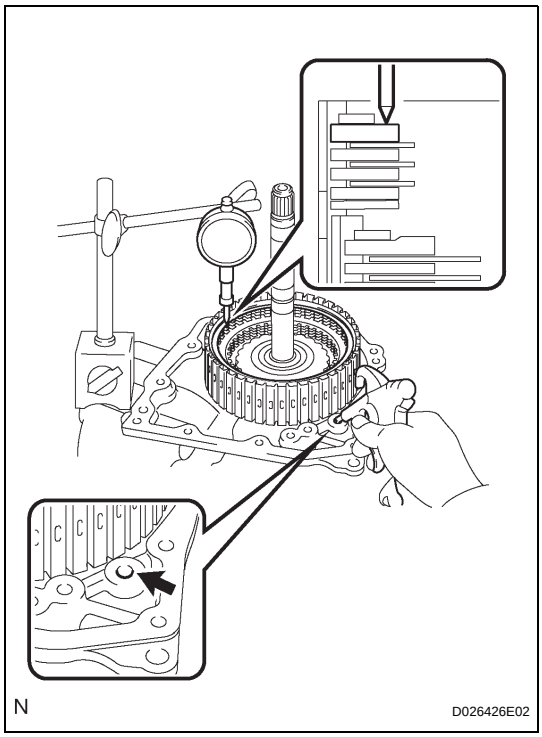

6. INSPECT PACK CLEARANCE OF REVERSE CLUTCH

(a) Install the intermediate shaft onto the transaxle rear cover.

(b) Using a dial indicator, measure the direct clutch pack clearance while applying and releasing compressed air (392 kPa, 4.0 kgf/cm2, 57 psi).
Clearance:
0.60 to 0.82 mm (0.02362 to 0.03228 in.)
If the pack clearance is less than the minimum, parts may have been assembled incorrectly, so check and reassemble again. If the clearance is not as specified, select another flange.
HINT:
There are 7 flanges of different thickness.
Flange thickness: mm (in.)

No.	Thickness	No.	Thickness
1	3.0 (0.118)	5	3.4 (0.134)
2	3.1 (0.122)	6	3.5 (0.138)
3	3.2 (0.126)	7	3.6 (0.142)
4	3.3 (0.130)	-	-

7. INSPECT PACK CLEARANCE OF DIRECT CLUTCH AND OVERDRIVE CLUTCH

(a) Using a dial indicator, measure the direct clutch & overdrive clutch pack clearance while applying and releasing compressed air (392 kPa, 4.0 kgf/cm^2, 57 psi).

Clearance:

0.61 to 0.83 mm (0.02401 to 0.03268 in.)

If the pack clearance is less than the minimum, parts may have been assembled incorrectly, so check and reassemble again. If the clearance is not as specified, select another flange.

HINT:

There are 7different thicknesses of flanges available.

Flange thickness: mm (in.)

No.	Thickness	No.	Thickness
0	2.5 (0.098)	4	2.9 (0.114)
1	2.6 (0.102)	5	3.0 (0.118)
2	2.7 (0.106)	6	3.1 (0.122)
3	2.8 (0.110)	-	-

(b) Check that the disc rotates when rotating the disc after inserting the rear planetary sun gear.

NOTICE:

Do not place the rear planetary sun gear in a vise.

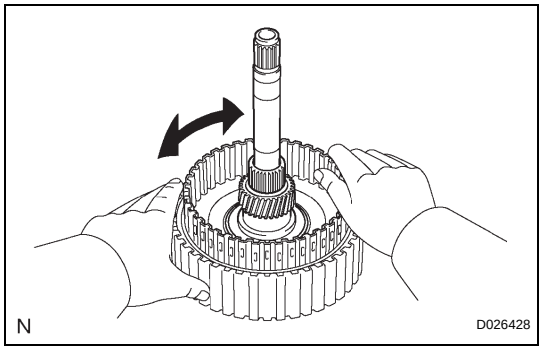

REASSEMBLY

1. INSTALL OVERDRIVE DIRECT CLUTCH O-RING

(a) Coat an O-ring with ATF, and install it to the direct clutch drum.

NOTICE:

Make sure that the O-ring is not twisted or pinched when it is installed.

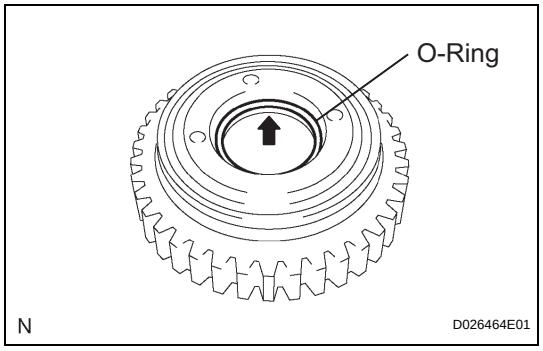

2. INSTALL OVERDRIVE DIRECT CLUTCH DRUM SUB-ASSEMBLY

(a) Coat the direct clutch drum with ATF, and install it to the intermediate shaft.

NOTICE:

- **Be careful not to damage the O-ring.**
- **Be careful not to damage the lip of the direct clutch drum.**

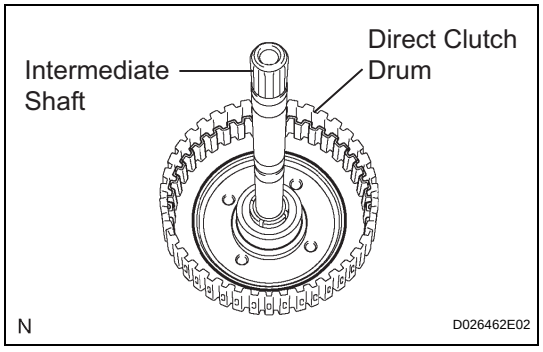

AX

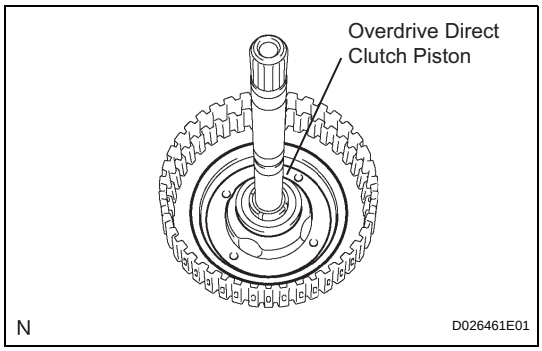

3. INSTALL OVERDRIVE DIRECT CLUTCH PISTON

(a) Coat the overdrive direct clutch piston with ATF, and install it to the direct clutch drum.

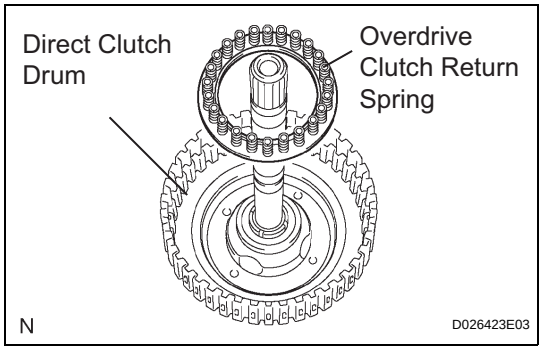

4. INSTALL OVERDRIVE CLUTCH RETURN SPRING SUB-ASSEMBLY

(a) Install the overdrive clutch return spring to the direct clutch drum.

NOTICE:

Installing the spring sub-assembly, check that all of the springs are fit in piston correctly.

(b) Coat the clutch balancer with ATF.

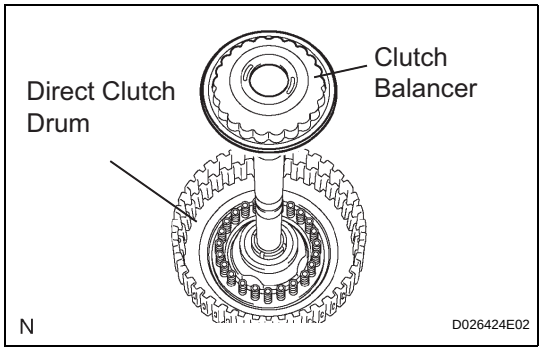

(c) Install the clutch balancer to the direct clutch drum.

NOTICE:

- **Be careful not to damage the lip of the direct clutch balancer.**
- **Make sure that the lip of the seal is not pinched and that it has no other defects.**
- **Apply sufficient ATF to the sealing lip before installing the clutch balancer.**

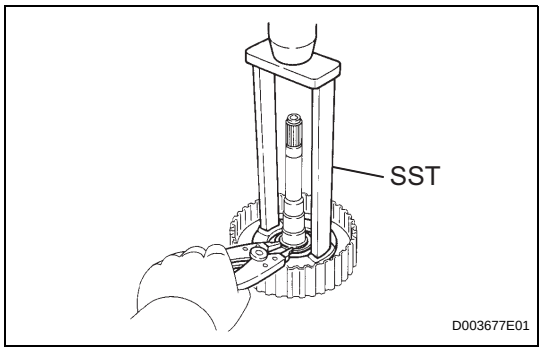

(d) Place SST on the clutch balancer and compress the overdrive clutch return spring with a press.

SST 09387-00020

(e) Using a snap ring expander, install the snap ring to the direct clutch drum.

(f) Be sure that the end gap of the snap ring is not aligned with the spring retainer claw.

NOTICE:

- **Stop the press when the spring seat is lowered to the place 1 to 2 mm (0.039 to 0.078 in.) from the snap ring groove.**
- **This prevents the spring seat from being deformed.**
- **Do not expand the snap ring excessively.**

AX

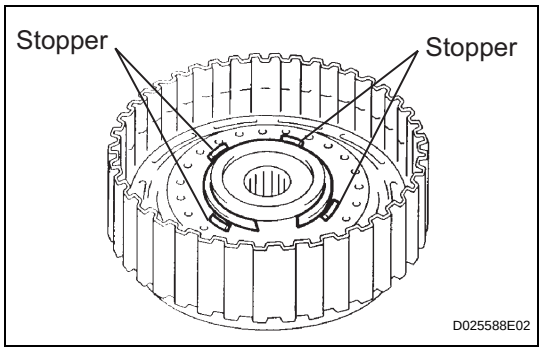

(g) Set the end gap of the snap ring in the piston shown in the illustration.
NOTICE:
The end gap of the snap ring should not align with any of the stoppers.

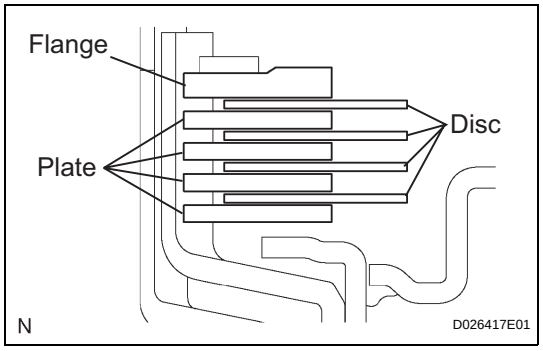

5. INSTALL OVERDRIVE DIRECT CLUTCH DISC
(a) Coat the 4 discs with ATF.
(b) Install the 4 plates, 4 discs and flange to the intermediate shaft.
NOTICE:
Make sure that the plates, discs, and flange are installed as shown in the illustration.

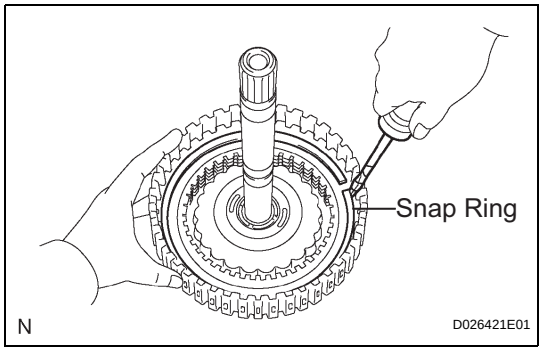

(c) Using a screwdriver, install the snap ring.
(d) Check that the end gap of the snap ring is not aligned with one of the cutouts.
NOTICE:
The snap ring should be fully engaged in the groove of the drum.

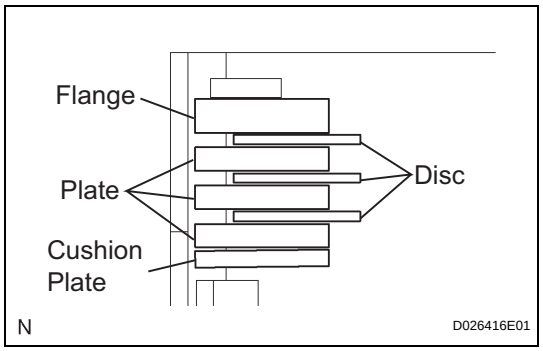

6. INSTALL DIRECT MULTIPLE DISC CLUTCH DISC
(a) Coat the 3 disc with ATF.
(b) Install the cushion plate, 3 plates, 3 disc and flange to the intermediate shaft.
NOTICE:
- **Install the cushion plate with the mark on the white surface facing to plate.**
- **Be careful about the order of discs, plate and flange assembly.**

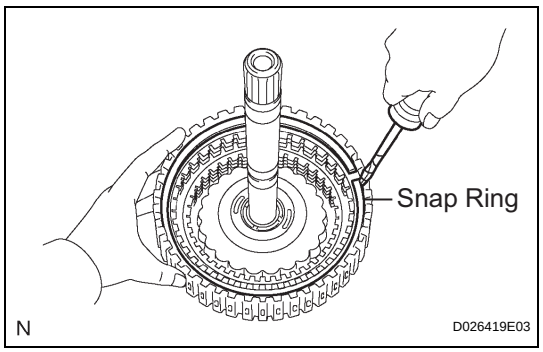

(c) Using a screwdriver, install the snap ling.
(d) Check that the end gap of the snap ling is not aligned with one of the cutouts.
NOTICE:
The slap ring should be fixed certainly in the groove of the drum.

AX