UNDERDRIVE CLUTCH

COMPONENTS

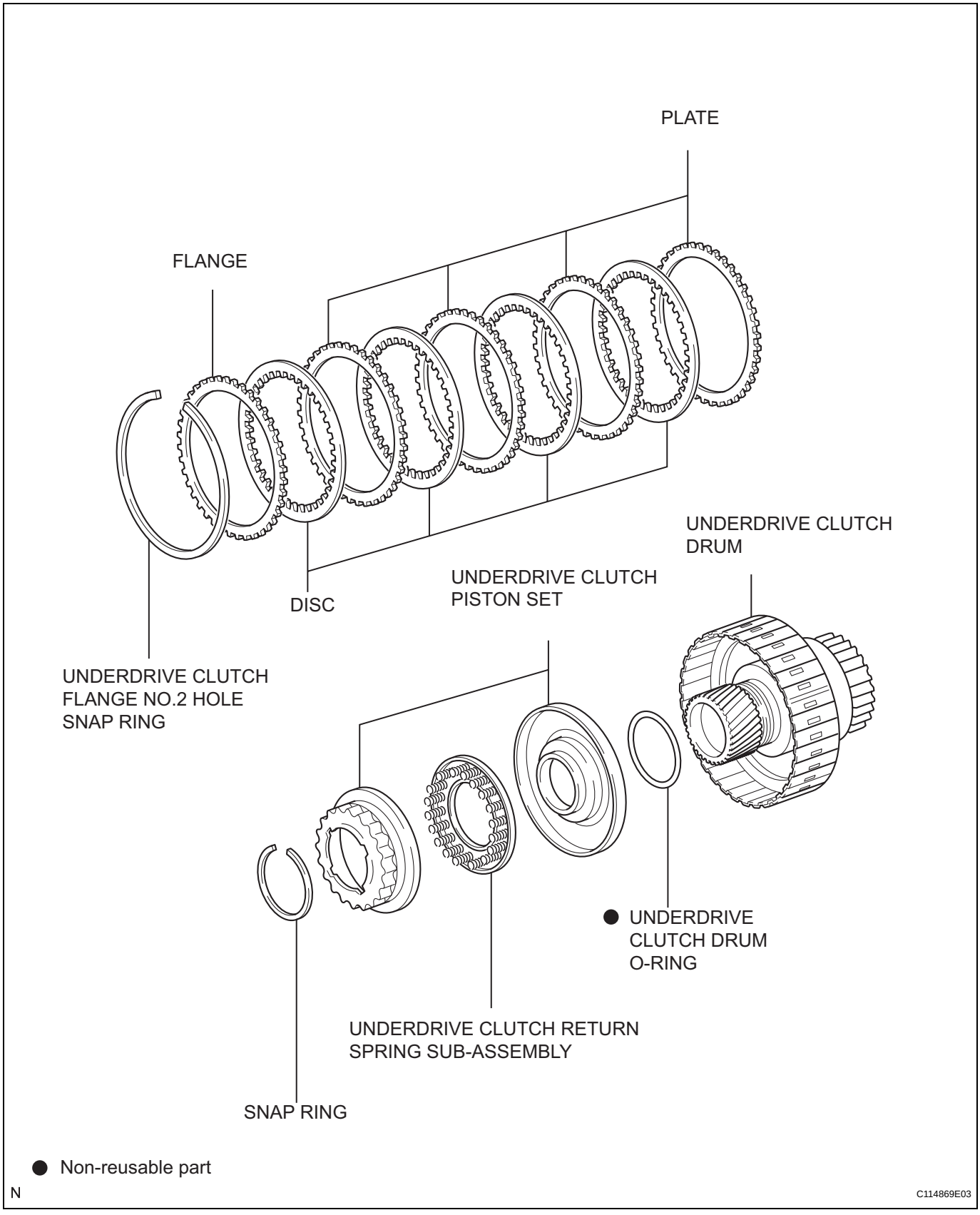

AX

DISASSEMBLY

1. INSPECT UNDERDRIVE PACK CLEARANCE

HINT:

(See page AX-266)

2. REMOVE UNDERDRIVE CLUTCH FLANGE NO.2 HOLE SNAP RING

(a) Using a screwdriver, remove the underdrive clutch flange No.2 snap ring.

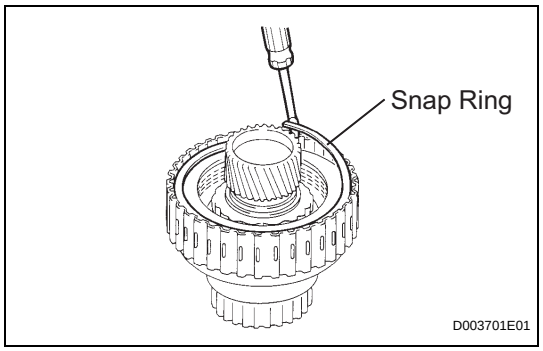

3. REMOVE UNDERDRIVE CLUTCH DISC NO.1

(a) Remove the flange, 4 discs and 4 plates from the underdrive clutch drum.

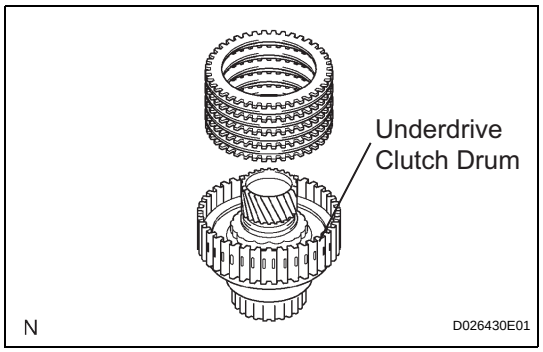

4. REMOVE UNDERDRIVE CLUTCH RETURN SPRING SUB-ASSEMBLY

(a) Place SST on the clutch balancer and compress the spring with a press.

SST 09350-32014

(b) Using a snap ring expander, remove the snap ring.

NOTICE:

- **Stop the press when the spring seat is lowered to the place 1 to 2 mm (0.039 to 0.078 in.) from the snap ring groove.**
- **This prevents the spring seat from being deformed.**
- **Do not expand the snap ring excessively.**

(c) Remove the clutch balancer from the underdrive clutch drum.

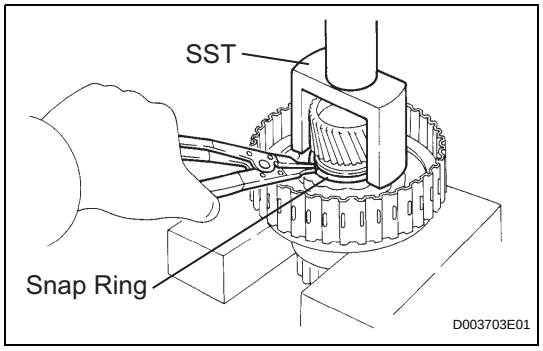

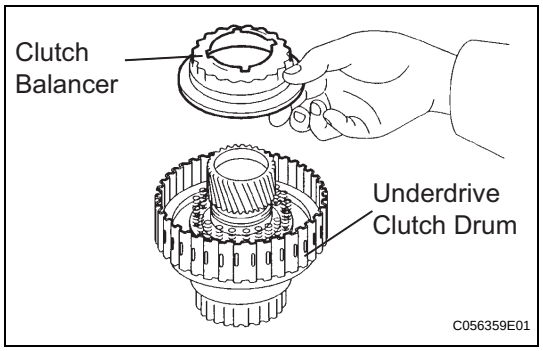

AX

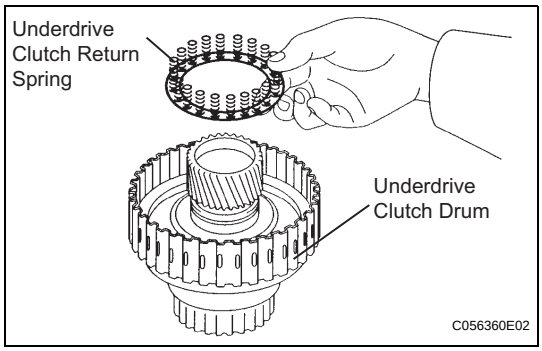

(d) Remove the return spring from the underdrive clutch drum.

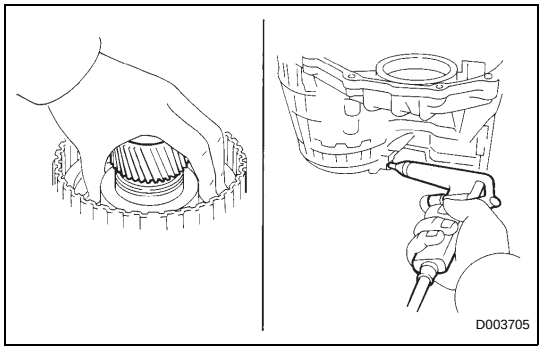

5. REMOVE UNDERDRIVE CLUTCH PISTON SET

(a) Install the underdrive clutch to the transaxle case.
NOTICE:
Be careful not to damage the oil seal ring.

(b) Holding the underdrive clutch piston by hand, apply compressed air (392 kPa, 4.0 kgf/cm^2, 57 psi) to the transaxle case to remove the underdrive clutch piston.

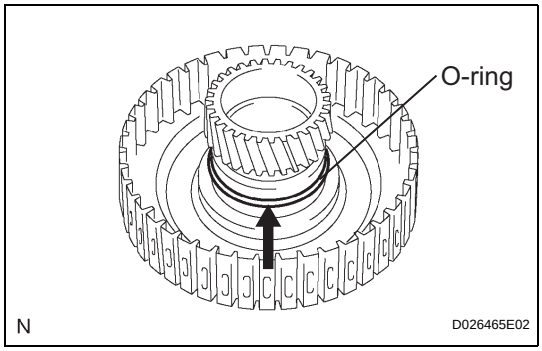

6. REMOVE UNDERDRIVE CLUTCH DRUM O-RING

(a) Using a screwdriver, remove the O-ring from the underdrive clutch drum.

AX

INSPECTION

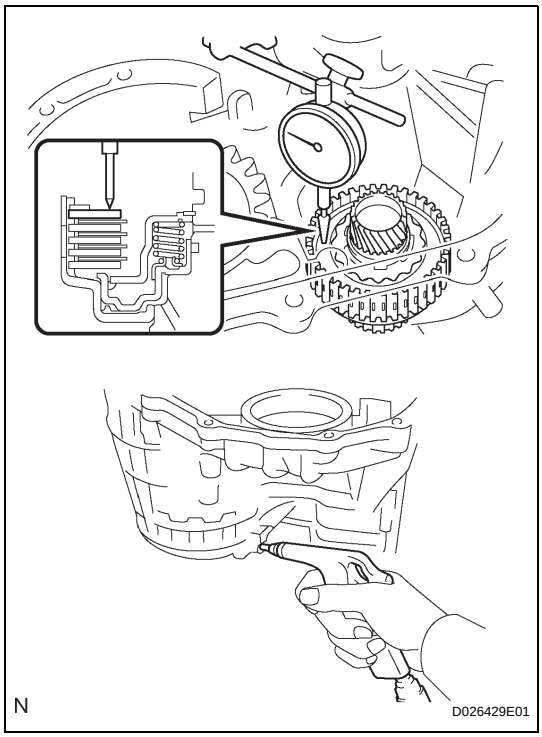

1. INSPECT UNDERDRIVE PACK CLEARANCE

(a) Install the underdrive clutch to the transaxle case.
NOTICE:
Be careful not to damage the oil seal rings.

(b) Install a dial indicator as shown in the illustration.

(c) Measure the underdrive clutch pack clearance while applying and releasing compressed air (392 kPa, 4.0 kgf/cm^2, 57 psi).
Pack clearance:
1.51 to 1.71 mm (0.0594 to 0.0673 in.)
If the pack clearance is not as specified, inspect the discs, plates and flange.
HINT:
There are 5 flanges in different thickness.
Flange thickness: mm (in.)

Mark	Thickness	Mark	Thickness
1	3.0 (0.118)	4	3.6 (0.122)
2	3.2 (0.126)	5	3.8 (0.130)
3	3.4 (0.134)	-	-

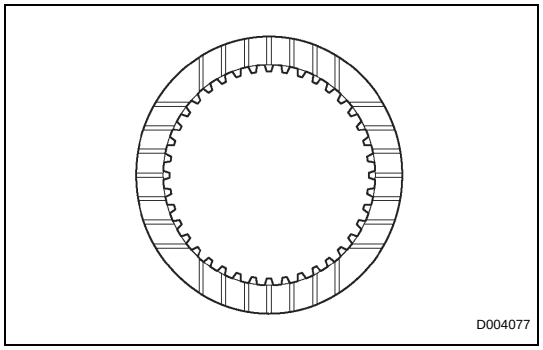

2. INSPECT UNDERDRIVE CLUTCH DISC NO.1

(a) Check if the sliding surface of the disc, plate and flange are worn or burnt. If necessary, replace them.
HINT:
- If the lining of the disc comes off or discolors, or if a part of the groove is worn, replace all discs.
- Before installing new discs, immerse them in ATF for at least 15 minutes.

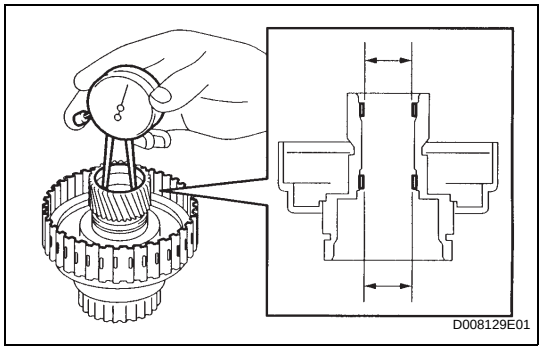

3. INSPECT UNDERDRIVE CLUTCH DRUM SUB-ASSEMBLY

(a) Using a dial indicator, measure the inside diameter of the underdrive clutch drum bushing.
Standard drum bushing:
37.06 to 37.08 mm (1.4591 to 1.4598 in.)
Maximum drum bushing:
37.13 mm (1.4618 in.)
If the inside diameter is greater than the maximum, replace the underdrive clutch drum.

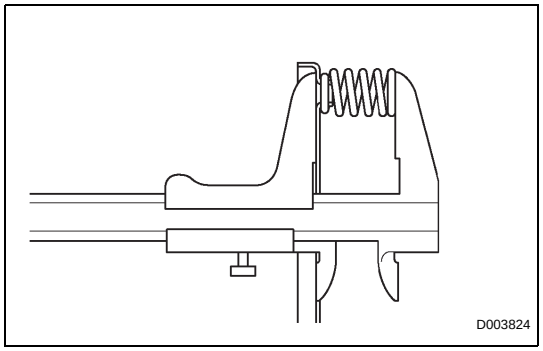

4. INSPECT UNDERDRIVE CLUTCH RETURN SPRING SUB-ASSEMBLY

(a) Using a vernier calipers, measure the free length of the spring together with the spring seat.
Standard free length:
17.14 mm (0.6752 in.)

REASSEMBLY

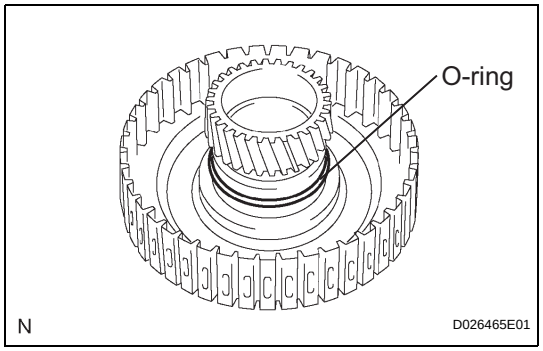

1. INSTALL UNDERDRIVE CLUTCH DRUM O-RING

(a) Coat a new O-ring with ATF, and install it to the underdrive clutch drum.
NOTICE:
Make sure that the O-ring is not twisted or pinched.

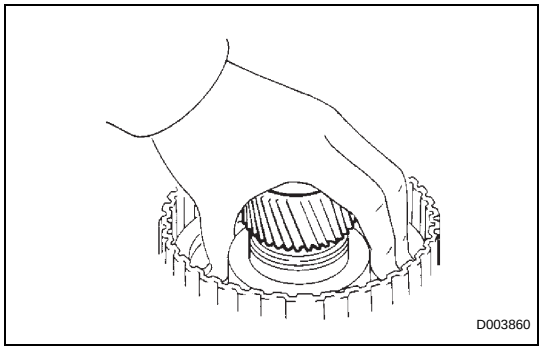

2. INSTALL UNDERDRIVE CLUTCH PISTON SET

(a) Coat the underdrive clutch piston with ATF, and install it to the underdrive clutch piston drum.
NOTICE:
- **Be careful not to damage the O-ring.**
- **Be careful not to damage the lip of the piston.**

AX

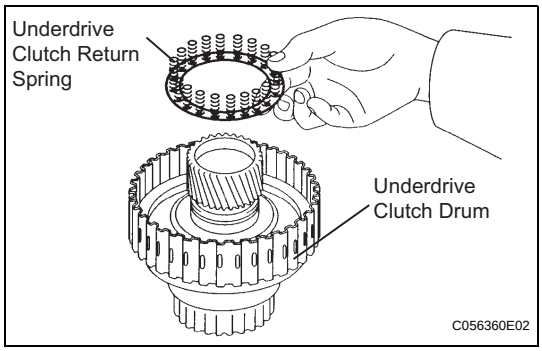

3. INSTALL UNDERDRIVE CLUTCH RETURN SPRING SUB-ASSEMBLY

(a) Install the return spring to the underdrive clutch drum.

NOTICE:

Installing the spring sub-assembly, check that all of the springs are fit in the piston correctly.

(b) Coat the clutch balancer with ATF.

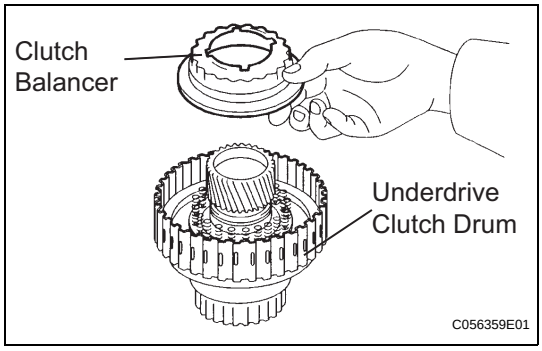

(c) Install the clutch balancer to the underdrive clutch drum.

NOTICE:

Be careful not to damage the lip of the clutch balancer.

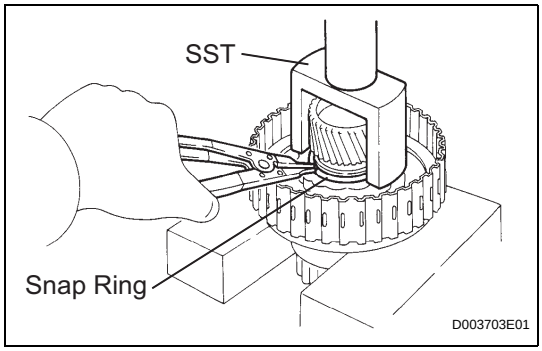

(d) Place SST on the clutch balancer and compress the piston return spring with a press.

SST 09350-32014 (09351-32070)

(e) Using a snap ring expander, install the snap ring to the underdrive clutch drum.

(f) Be sure that the end gap of the snap ring is not aligned with the spring retainer claw.

NOTICE:

- **Stop the press when the spring seat is lowered to the place 1 to 2 mm (0.039 to 0.078 in.) from the snap ring groove.**
- **This prevents the spring seat from being deformed.**
- **Do not expand the snap ring excessively.**

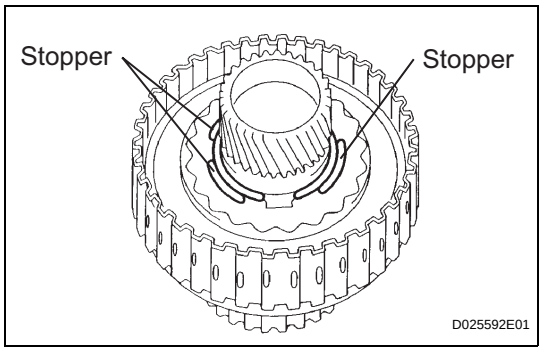

(g) Set the end gap of the snap ring in the underdrive clutch drum as shown in the illustration.

NOTICE:

The end gap of the snap ring should not align with any of the stoppers.

AX

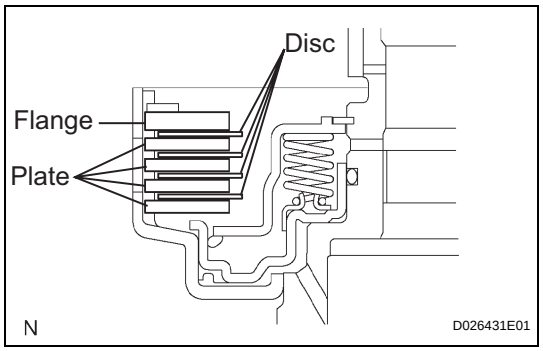

4. INSTALL UNDERDRIVE CLUTCH DISC NO.1

(a) Coat the 4 discs with ATF.

(b) Install the 4 plates, 4 discs and flange to the underdrive clutch drum.

NOTICE:

Make sure that the plates, discs, and flange are installed as shown in the illustration.

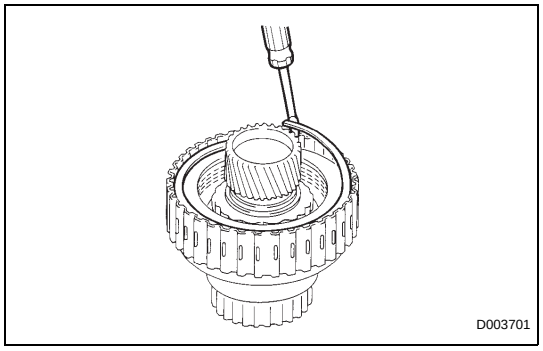

5. INSTALL 1ST & REVERSE BRAKE RETURN SPRING SHAFT SNAP RING

(a) Using a screwdriver, install the underdrive clutch flange No.2 hole snap ring.

(b) Check that the end gap of snap ring is not aligned with one of the cutouts.

NOTICE:

The snap ring should be fully engaged in the groove of the drum.

6. INSPECT UNDERDRIVE PACK CLEARANCE

HINT:

(See page AX-266)