PROPELLER SHAFT ASSEMBLY (for 4WD)

COMPONENTS

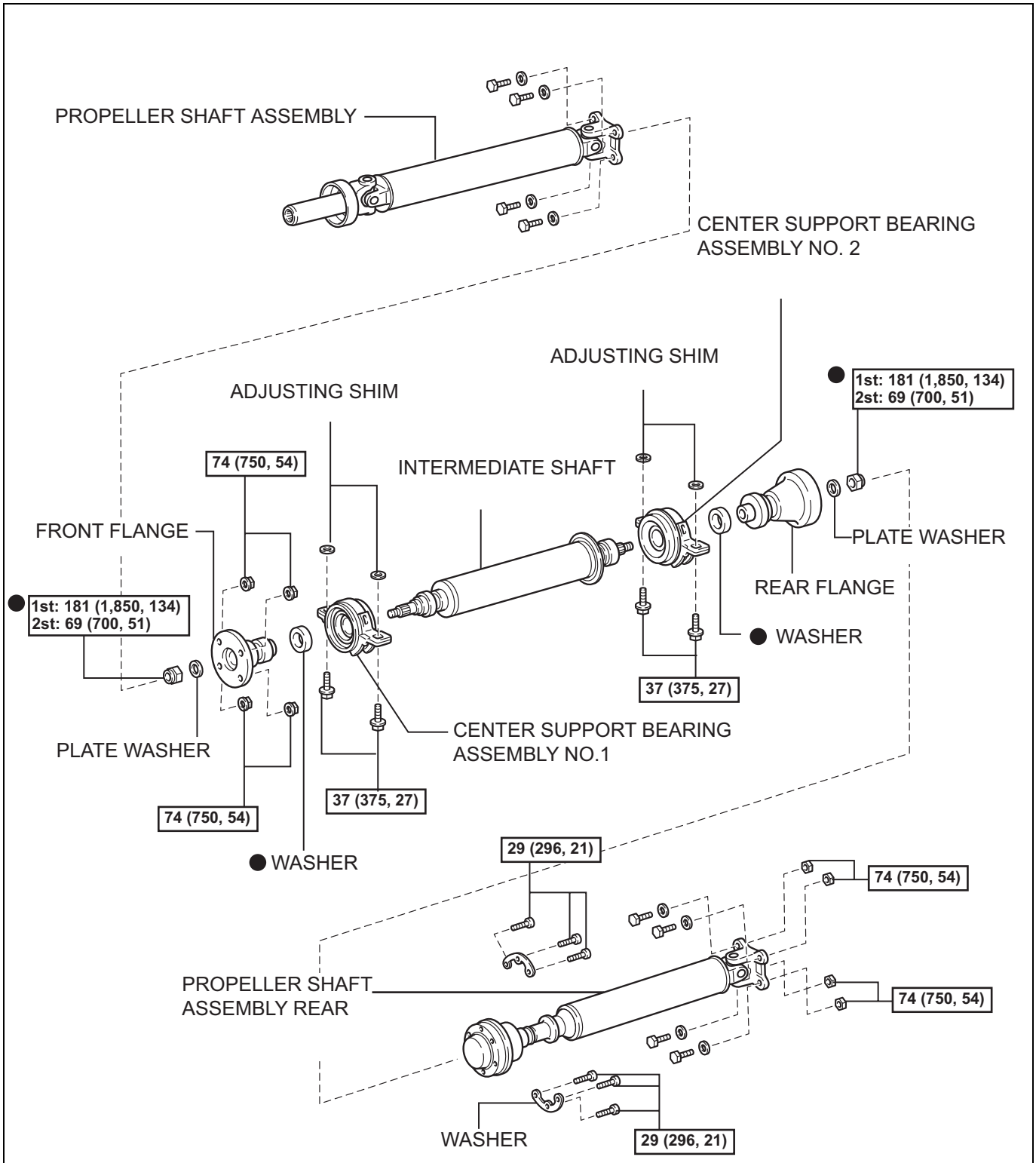

PR

REMOVAL

1. REMOVE EXHAUST PIPE ASSEMBLY

(a) Remove exhaust pipe assembly (See page EX-8).

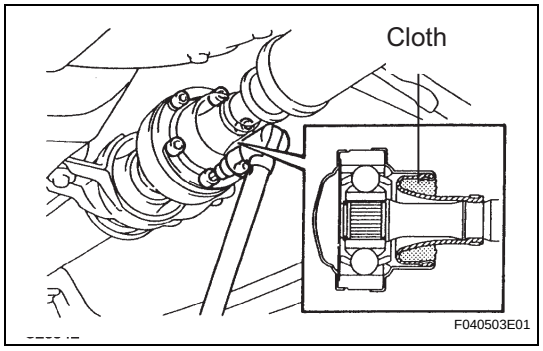

2. REMOVE PROPELLER W/CENTER BEARING SHAFT ASSEMBLY

(a) Depress the brake pedal and hold it down.

(b) Using a hexagon wrench (6 mm), loosen the cross groove joint set bolts a half turn.
HINT:
Place a cloth in the inside of the universal joint cover so that the boot does not touch the inside of the universal joint cover.

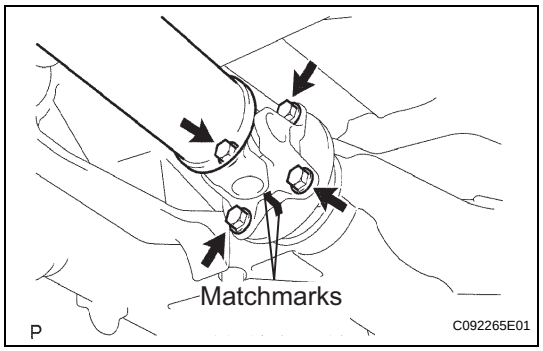

(c) Put matchmarks on both the flanges.

(d) Remove the 4 nuts, bolts and washers.

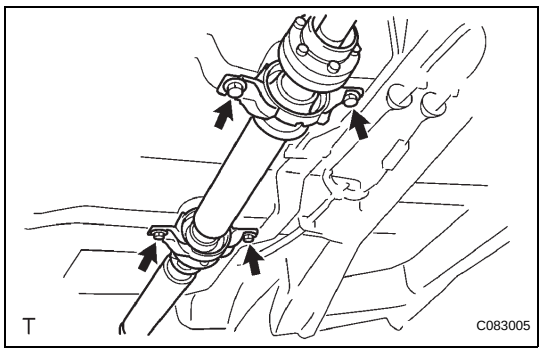

(e) Remove the 4 bolts, 2 adjusting shims and propeller shaft w/ center bearing shaft assembly.
NOTICE:
- **When removing the propeller shaft, do not apply excessive force to the universal joint.**
- **During and after the removal of the propeller shaft, keep the universal joint angle straight (within 15 degrees).**
- **Be careful not to damage the oil seal.**

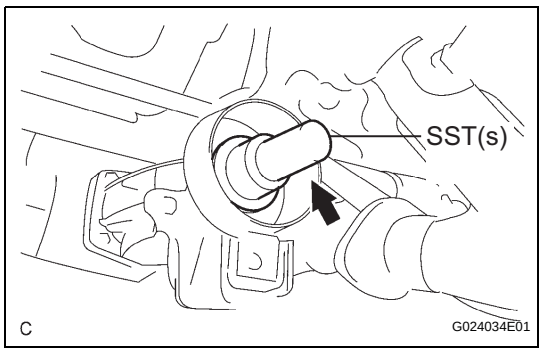

(f) Insert SST(s) in the transfer extension housing to prevent oil leakage.
SST 09325-20010
NOTICE:
Be careful not to damage the oil seal.

PR

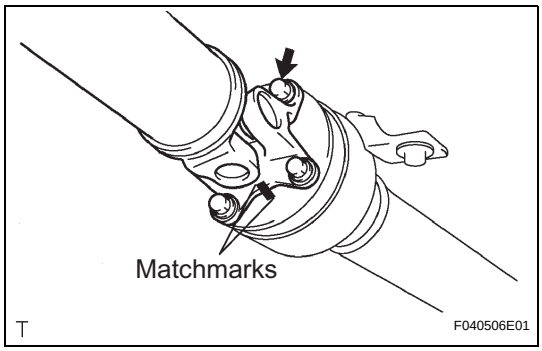

DISASSEMBLY

1. REMOVE PROPELLER SHAFT ASSEMBLY

(a) Put matchmarks on both the flanges.

(b) Remove the 4 nuts, bolts and washers.

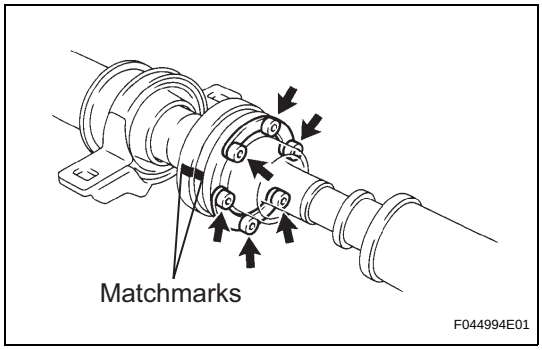

2. REMOVE INTERMEDIATE SHAFT

(a) Put matchmarks on the propeller shaft sub-assembly and universal joint flange.
NOTICE:
Do not use a punch for the marks.

(b) Using a hexagon wrench (6 mm), remove the 6 bolts and 2 washers and separate the intermediate shaft from the propeller shaft assembly rear.

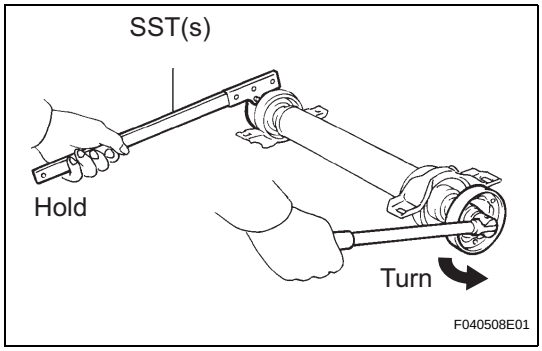

3. REMOVE CENTER SUPPORT BEARING ASSEMBLY NO.1

(a) Using a chisel and a hammer, loosen the staked part of the nut.

(b) Using SST(s) to hold the front flange, remove the nut and plate washer.
SST 09330-00021

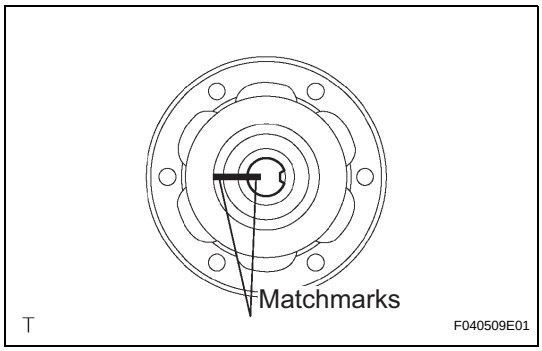

(c) Put matchmarks on the rear flange and shaft.

(d) Hold the intermediate shaft in a vise between aluminium plates.
NOTICE:
Do not overtighten the vise.

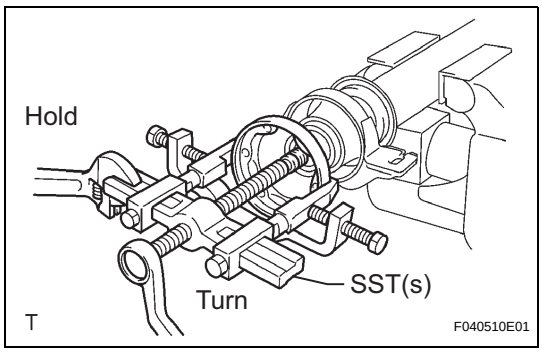

(e) Using SST(s), remove the rear flange.
SST 09950-40011 (09951-04020, 09952-04010, 09953-04030, 09954-04010, 09955-04061, 09957-04010, 09958-04011)
NOTICE:
Be careful not to damage the universal joint flange.

(f) Remove the center support bearing assembly No. 1 (rear) and washer.

PR

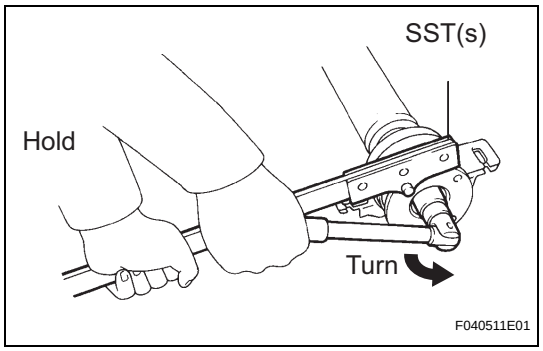

4. REMOVE CENTER SUPPORT BEARING ASSEMBLY NO.1

(a) Using a chisel and a hammer, loosen the staked part of the nut.

(b) Using SST(s) to hold the front flange, remove the nut and plate washer.
SST 09330-00021

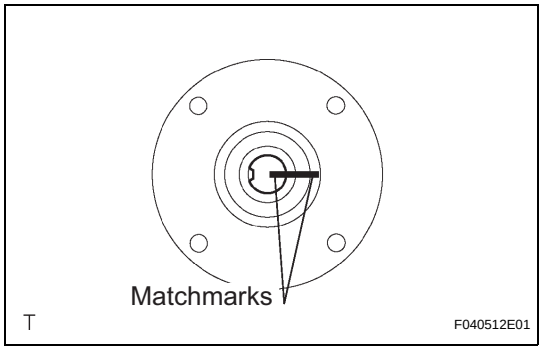

(c) Put matchmarks on the front flange and shaft.

(d) Hold the intermediate shaft in a vise between aluminium plates.
NOTICE:
Do not overtighten the vise.

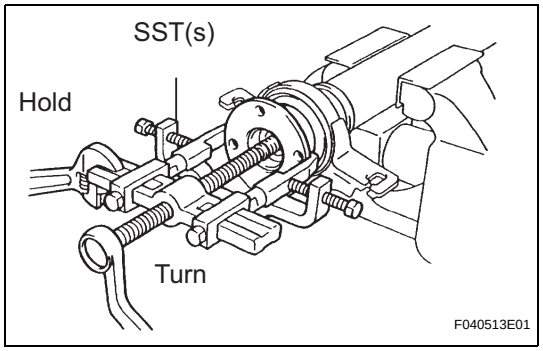

(e) Using SST(s), remove the front flange.
SST 09950-40011 (09951-04020, 09952-04010, 09953-04030, 09954-04010, 09955-04061, 09957-04010, 09958-04011)
NOTICE:
Be careful not to damage the universal joint flange.

(f) Remove the center support bearing assembly No. 1 (front) and washer.

INSPECTION

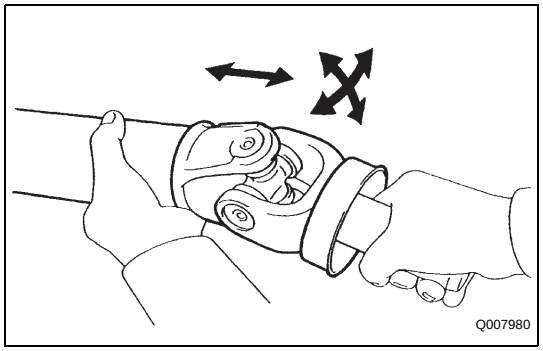

1. INSPECT SPIDER BEARING

(a) Check that the spider bearing moves smoothly by turning the flange.

(b) Check for the looseness around the joint by strongly moving the flange in the axial and radial directions.
HINT:
If necessary, replace the shaft.

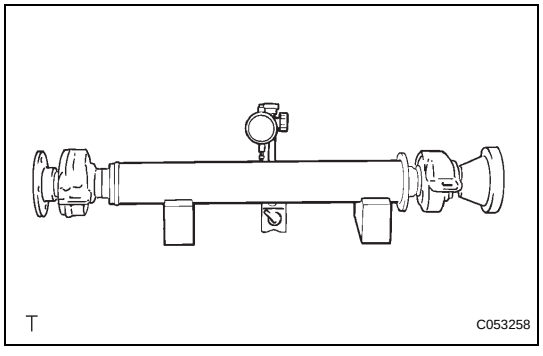

2. INSPECT INTERMEDIATE SHAFT

(a) Using a dial gauge, check for the swing of the intermediate shaft.
Maximum swing:
0.8 mm (0.031 in.)
NOTICE:
The dial gauge must be set at right angles to the center of the intermediate shaft.
HINT:
If shaft swing exceeds the maximum, replace the shaft.

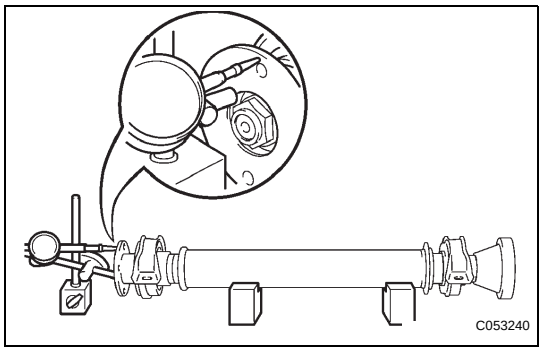

(b) Using a dial gauge, check for the runout of the front side of the intermediate shaft flange.
Maximum runout:
0.1 mm (0.004 in.)
NOTICE:
Ensure that the dial gauge is set at right angles to the measurement surface.

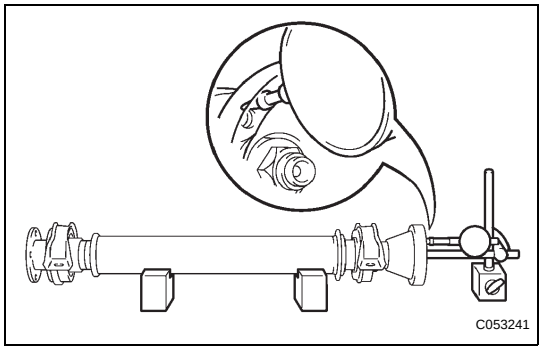

(c) Set a dial gauge outside the bolt hole on the rear side flange of the intermediate shaft, and check for runout in the horizontal direction.
Maximum runout:
0.1 mm (0.004 in.)
NOTICE:
Ensure that the dial gauge is set at right angles to the measurement surface.

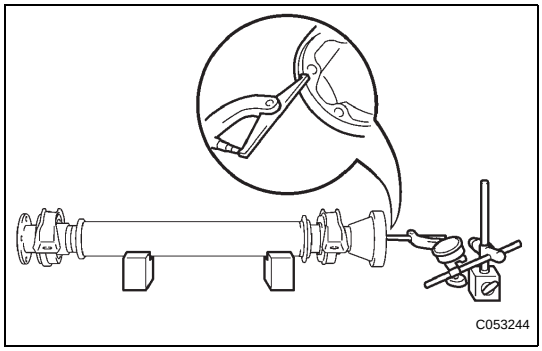

(d) Set a dial gauge to the circumference of the intermediate shaft flange, and check for runout in the vertical direction.
Maximum runout:
0.1 mm (0.004 in.)
NOTICE:
Ensure that the dial gauge is set at right angles to the measurement surface.
HINT:
If the intermediate shaft flange runout exceeds the maximum, replace the intermediate shaft.

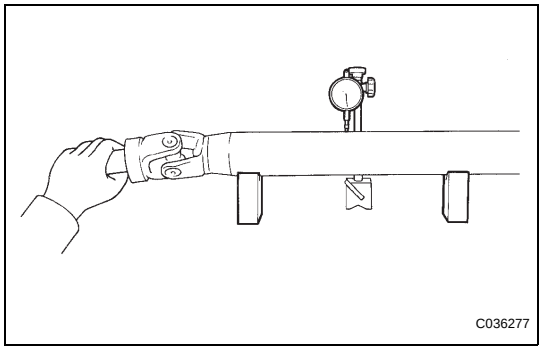

3. INSPECT PROPELLER SHAFT ASSEMBLY

(a) Using a dial gauge, check for the swing of the propeller shaft assembly.
Maximum swing:
0.8 mm (0.031 in.)
HINT:
If shaft swing exceeds the maximum, replace the propeller shaft assembly.
NOTICE:
The dial gauge must be set at right angles to the center of the propeller shaft.

PR

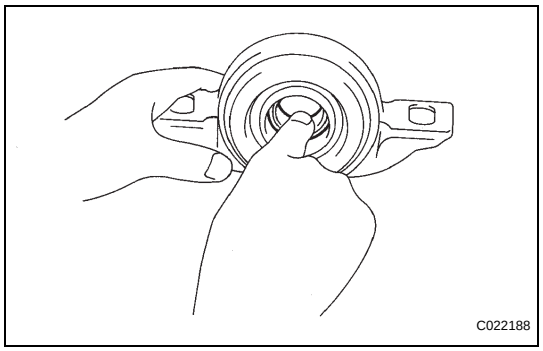

4. INSPECT CENTER SUPPORT BEARING ASSEMBLY NO.1

(a) Turn the bearing by hand with applying force in the direction of rotating. Check that the bearing turns smoothly.

(b) Check that the seals and bracket are not cracked or damaged.

HINT:

If the bearing is damaged, worn, or does not turn smoothly, replace it.

5. INSPECT CENTER SUPPORT BEARING ASSEMBLY NO.1

(a) Inspect the center support bearing assembly No. 1 (rear) following the same procedures as for the center support bearing assembly No. 1 (front).

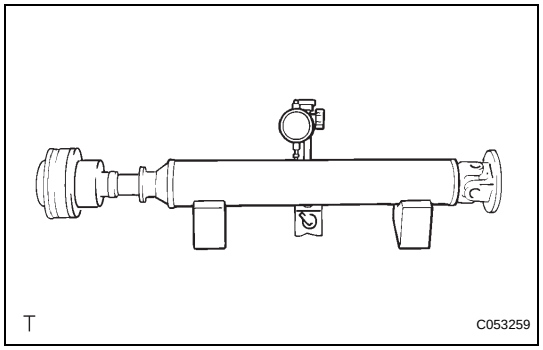

6. INSPECT PROPELLER SHAFT ASSEMBLY REAR

(a) Using a dial gauge, check for the runout of the rear propeller shaft assembly rear.

Maximum runout:

0.8 mm (0.031 in.)

HINT:

If the shaft runout exceeds the maximum, replace the rear propeller shaft assembly rear.

NOTICE:

The dial gauge must be set at right angles to the center of the propeller shaft.

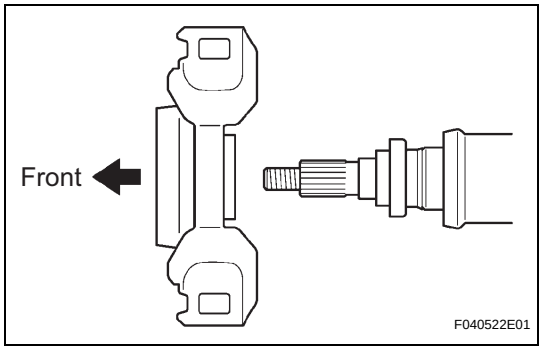

REASSEMBLY

1. INSTALL CENTER SUPPORT BEARING ASSEMBLY NO.1

(a) Set the center support bearing assembly No. 1 (front) to the intermediate shaft, as shown in the illustration.

(b) Install a new washer to the intermediate shaft.

NOTICE:

Be sure to install the bearing in the correct direction.

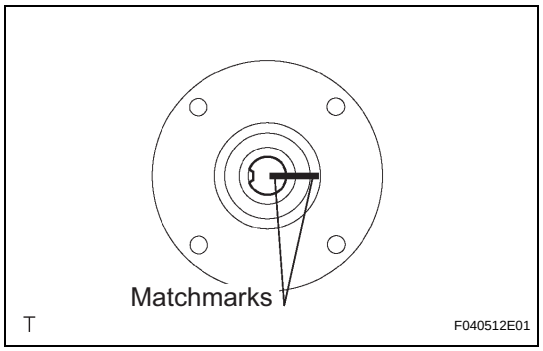

(c) Align the matchmarks on the front flange and shaft, and place the flange on the shaft.

PR

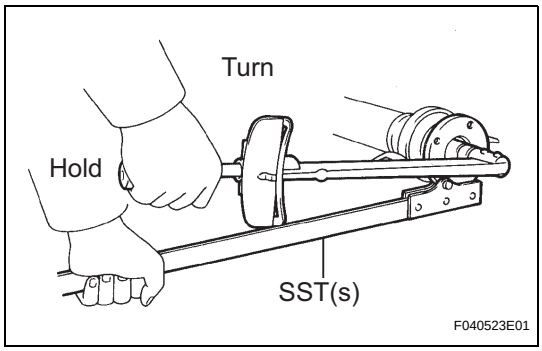

(d) Using SST(s) to hold the front flange, press the center support bearing assembly No. 1 (front) into the position by tightening down with a new nut and plate washer.
SST 09330-00021
Torque: 181 N*m (1,850 kgf*cm, 134 ft.*lbf)
(e) Loosen the nut.
(f) Torque the nut again.
Torque: 69 N*m (700 kgf*cm, 51 ft.*lbf)
(g) Using a chisel and a hammer, stake the nut.

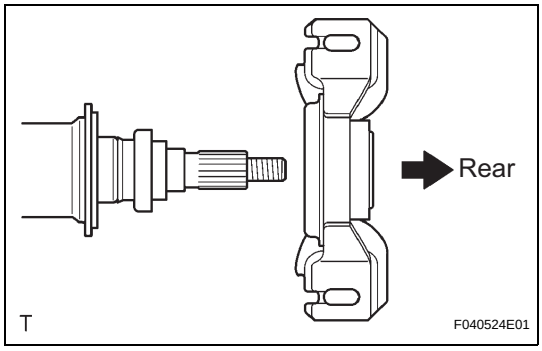

2. INSTALL CENTER SUPPORT BEARING ASSEMBLY NO.1
(a) Set the center support bearing assembly No. 1 (rear) on the shaft, as shown in the illustration.
(b) Install a new washer to the shaft.
NOTICE:
Be sure to install the bearing in the correct direction.

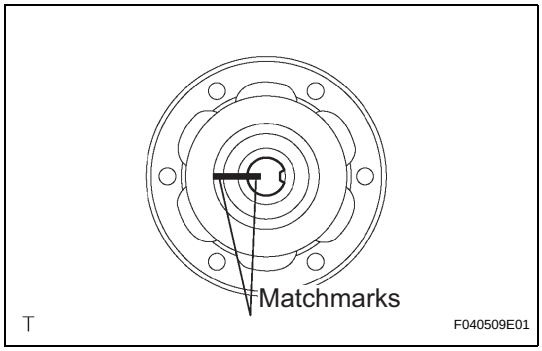

(c) Align the matchmarks on the rear flange and shaft, and place the flange on the shaft.

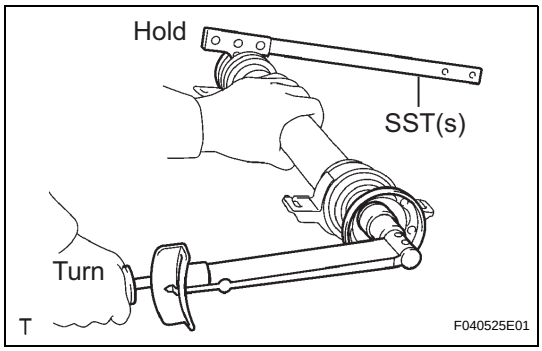

(d) Using SST(s) to hold the front flange, press the center support bearing assembly No. 1 (rear) into the position by tightening down with a new nut and plate washer.
SST 09330-00021
Torque: 181 N*m (1,850 kgf*cm, 134 ft.*lbf)
(e) Loosen the nut.
(f) Torque the nut again.
Torque: 69 N*m (700 kgf*cm, 51 ft.*lbf)
(g) Using a chisel and a hammer, stake the nut.

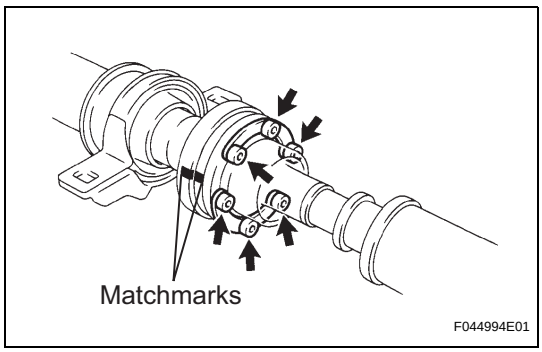

3. INSTALL INTERMEDIATE SHAFT
(a) Align the matchmarks on the intermediate shaft and rear propeller shaft assembly rear, then install the 2 washers and 6 bolts.
(b) Using a hexagon wrench (6 mm), loosely tighten the 6 bolts.

PR

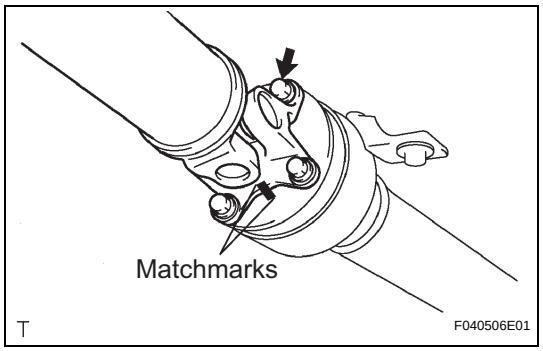

4. INSTALL PROPELLER SHAFT ASSEMBLY

(a) Align the matchmarks on the propeller shaft assembly flange and front flange, and connect the shaft with the 4 bolts, washers and nuts.
Torque: 74 N*m (750 kgf*cm, 54 ft.*lbf)

(b) Check that each joint of the propeller shaft is facing in the correct direction, as shown in the illustration below.

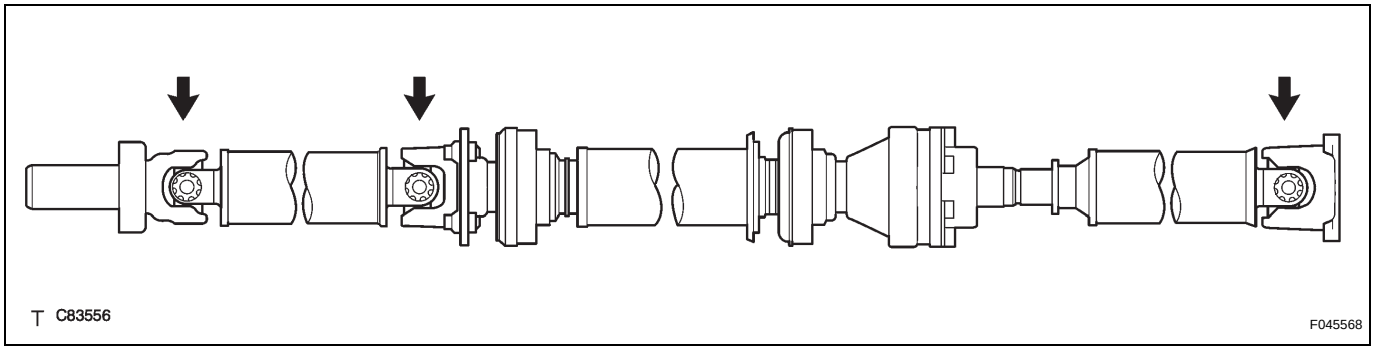

INSTALLATION

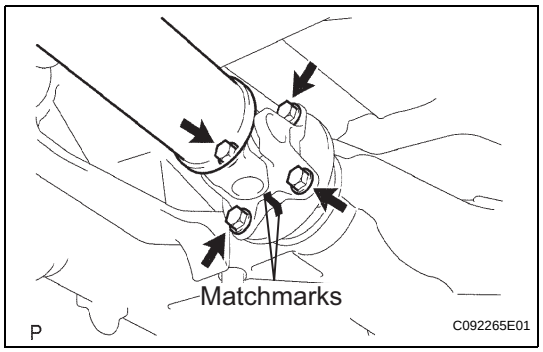

1. INSTALL PROPELLER W/CENTER BEARING SHAFT ASSEMBLY

(a) Align the matchmarks on the propeller shaft assembly rear flange and differential companion flange, and connect the shaft with the 4 bolts, washers and nuts.

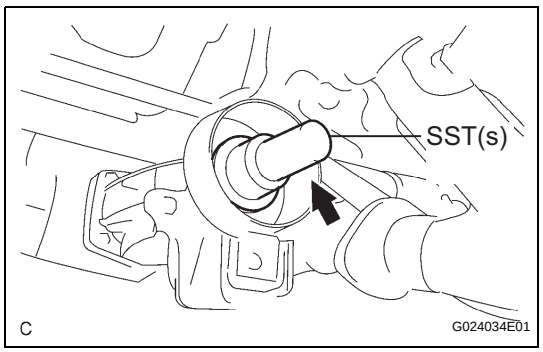

(b) Remove SST(s) from the extension housing.

(c) Insert the yoke into the extension housing.
NOTICE:
- **Be careful not to damage the oil seal.**
- **Be careful not to damage the universal joint boot when installing the propeller shaft.**

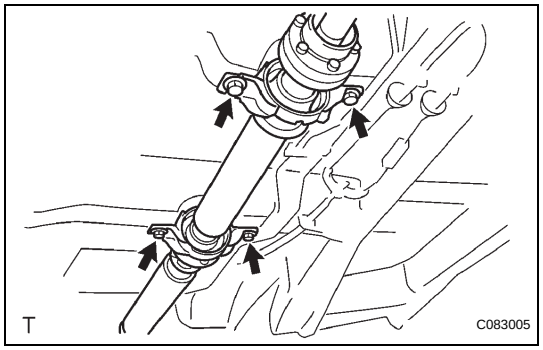

(d) Install the 2 adjusting shims and propeller shaft w/ center bearing, and loosely tighten the 4 bolts.

PR

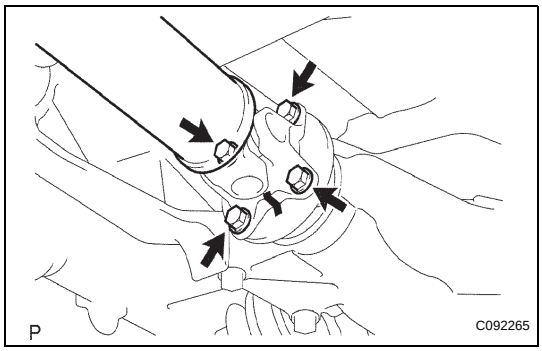

(e) Tighten the 4 nuts.
Torque: 74 N*m (750 kgf*cm, 54 ft.*lbf)

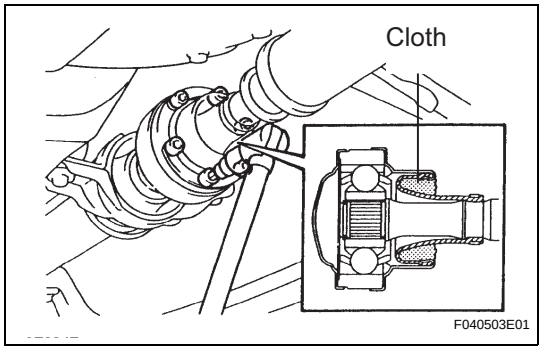

2. FULLY TIGHTEN PROPELLER W/CENTER BEARING SHAFT ASSEMBLY

(a) Remove the cloth from the joint.
(b) Using a hexagon wrench (6 mm), tighten the 6 bolts.
Torque: 29 N*m (296 kgf*cm, 21 ft.*lbf)

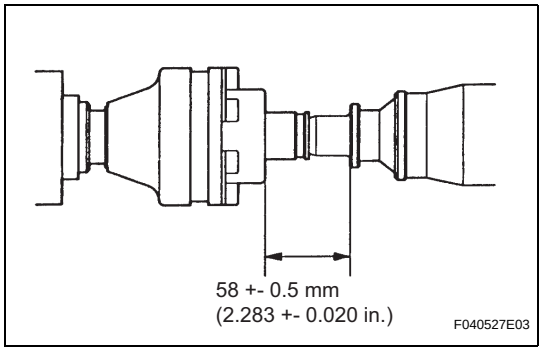

(c) With the vehicle unloaded, adjust the dimension between the rear side of the cover and shaft, as shown in the illustration.

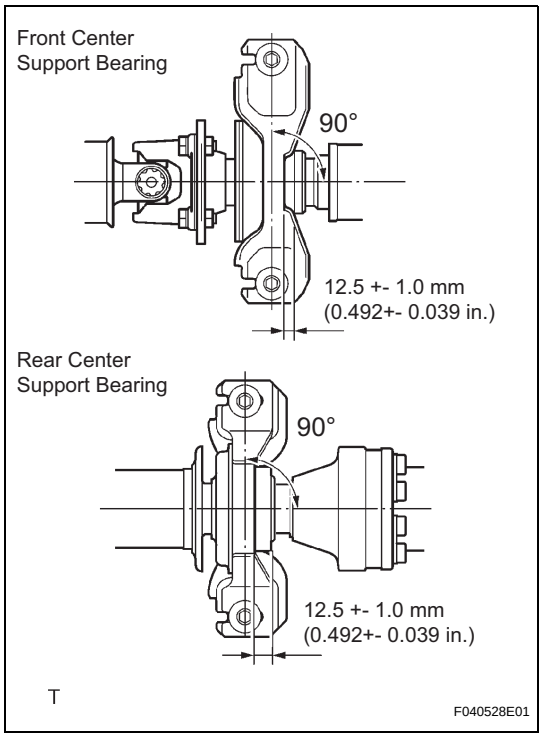

(d) Adjust the front and rear dimensions between the edge surface of the center support bearing and the edge surface of the cushion to 12.5 +- 1.0 mm (0.492 +- 0.039 in.) respectively as shown in the illustration, then torque the bolts.
Torque: 37 N*m (375 kgf*cm, 27 ft.*lbf)
(e) Check that the center line of the bracket is at right angles to the shaft axial direction.
(f) If any vibration or noise occurs, perform joint angle check as follows and replace the adjusting shim with a proper one.
  (1) Turn the propeller shaft several times by hand to stabilize the center support bearings.
  (2) Using a jack, raise and lower the differential to stabilize the differential mounting cushion.
  (3) Remove the transfer dynamic damper.
  (4) Using SST(s), measure the installation angle of the transfer extension housing (A) and front propeller shaft (B).
  SST 09370-50010
  No. 1 joint angle:
  A minus B = -0.4° to -1.6°

PR

(5) Using SST(s), measure the installation angle of the rear propeller shaft (C) and rear differential (D).
SST 09370-50010
No. 2 joint angle:
C minus D = -1.6° to -3.6°

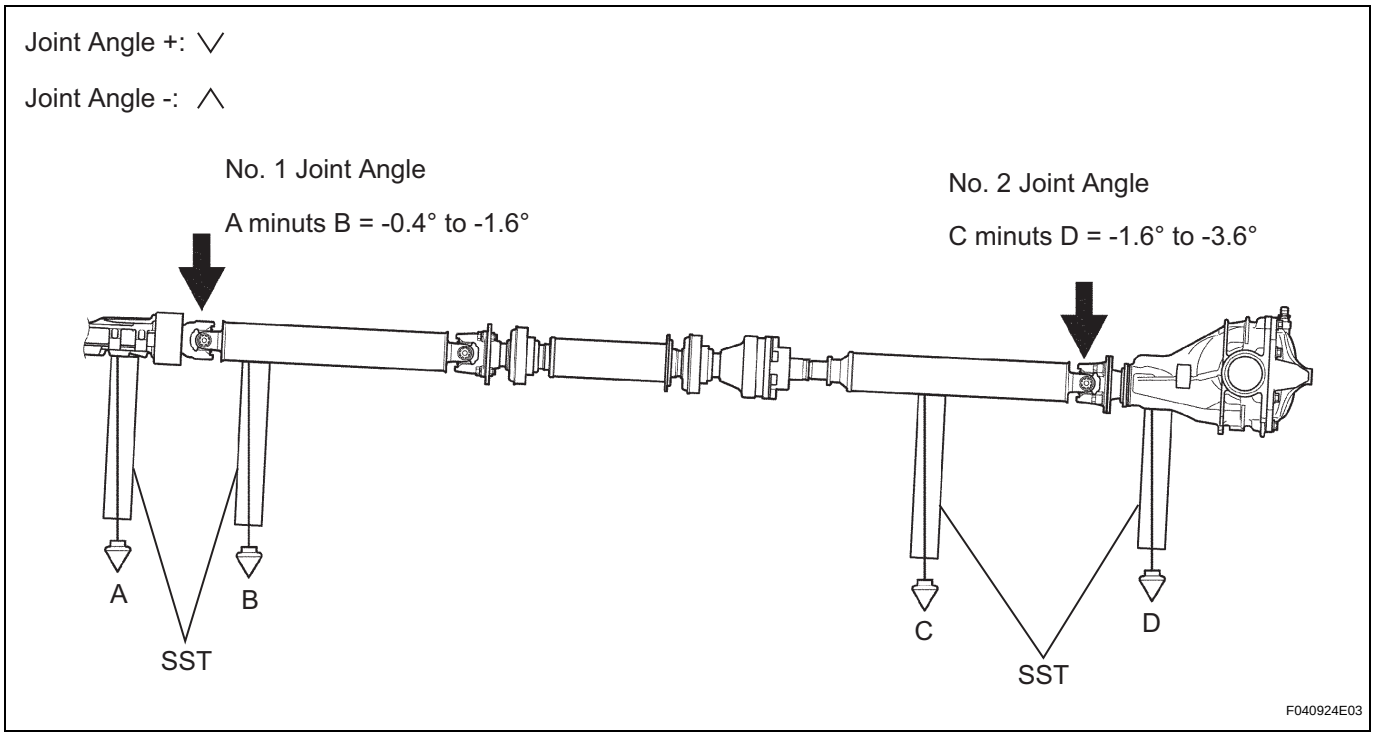

If the measured angle is not within the specification, adjust with the center support bearing adjusting shim.
Center support bearing adjusting shim thickness

Thickness mm (in.)	Thickness mm (in.)
3.2 (0.126)	4.5 (0.177)
6.5 (0.256)	9.0 (0.354)

(g) Install the transfer dynamic damper.
Torque: 26 N*m (260 kgf*cm, 19 ft.*lbf)

3. INSTALL EXHAUST PIPE ASSEMBLY
(a) Install exhaust pipe assembly (See page EX-10).

PR