REMOVAL

1. DRAIN AUTOMATIC TRANSAXLE FLUID

(a) Remove the drain plug, gasket and drain ATF.

(b) Install a new gasket and the drain plug.

Torque: 49 N*m (500 kgf*cm, 36 ft.*lbf)

2. DRAIN TRANSFER OIL (for 4WD)

HINT:

(See page TF-8)

3. REMOVE FRONT WHEEL

4. REMOVE FRONT AXLE HUB LH NUT

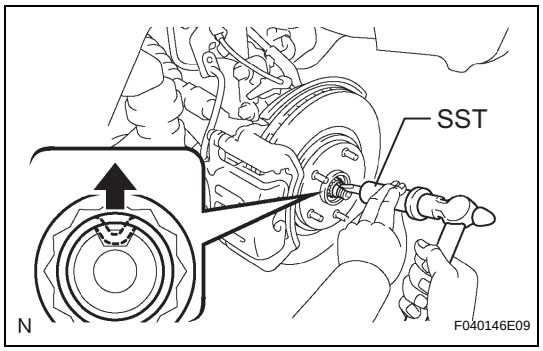

(a) Using SST and a hammer, unstake the staked part of the axle hub LH nut.

SST 09930-00010

NOTICE:

Loosen the staked part of the nut completely, otherwise the screw of the drive shaft may be damaged.

(b) While applying the brakes, remove the lock axle hub LH nut.

5. SEPARATE FRONT STABILIZER LINK ASSEMBLY LH

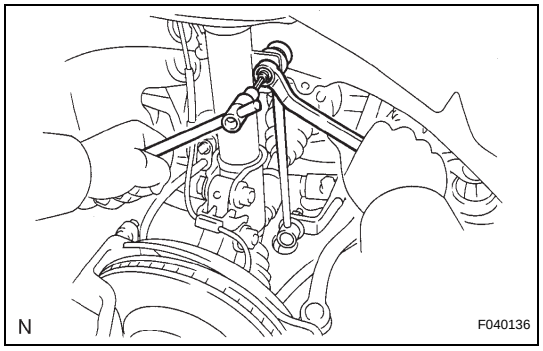

(a) Remove the nut, and separate the stabilizer link assembly LH.

HINT:

If the ball joint turns together with the nut, use a hexagon wrench (6 mm) to hold the stud.

6. SEPARATE SPEED SENSOR FRONT LH

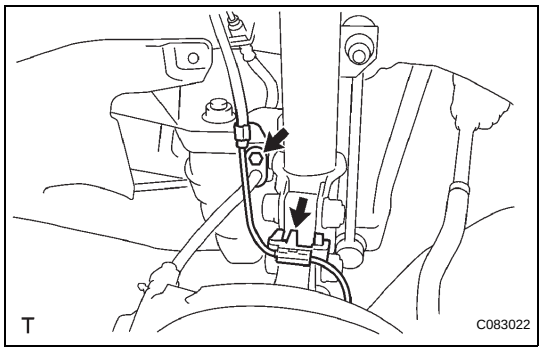

(a) Remove the bolt and clip, and separate the sensor wire and hose from the shock absorber.

NOTICE:

Be careful not to damage the speed sensor.

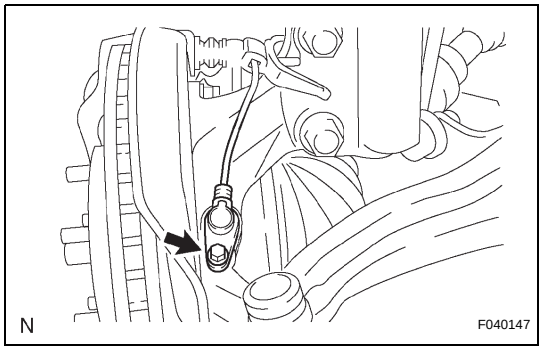

(b) Remove the bolt, and separate the speed sensor from LH from the steering knuckle.

NOTICE:

Prevent foreign matter from adhering to the speed sensor.

DS

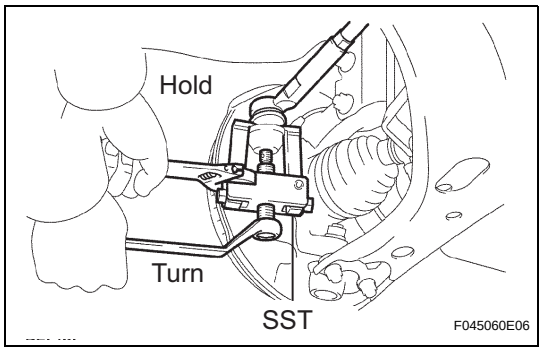

7. SEPARATE TIE ROD END SUB-ASSEMBLY LH

(a) Remove the cotter pin and nut.

(b) Using SST, separate the tie rod end from the steering knuckle.

SST 09628-62011

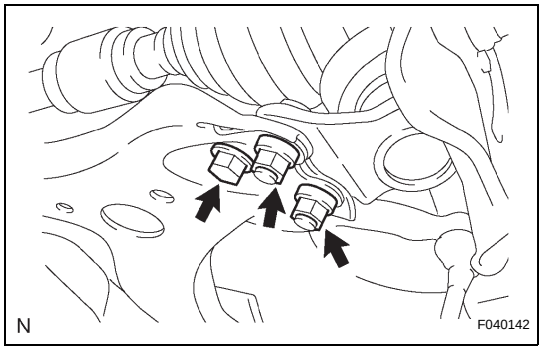

8. SEPARATE NO. 1 FRONT SUSPENSION ARM SUB-ASSEMBLY LOWER LH

(a) Remove the bolt and 2 nuts, and separate the No. 1 front suspension arm sub-assembly lower from the lower ball joint.

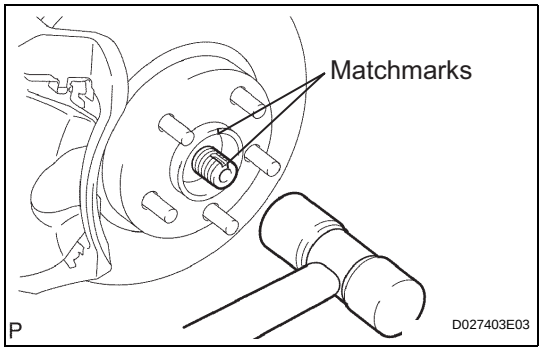

9. SEPARATE FRONT AXLE ASSEMBLY LH

(a) Using a plastic hammer, separate the drive shaft from the axle hub.

NOTICE:

Be careful not to damage the boot and speed sensor rotor.

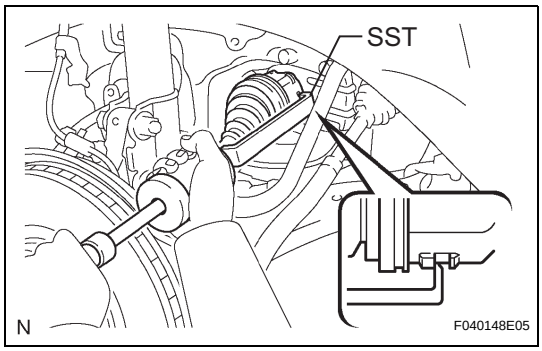

10. REMOVE FRONT DRIVE SHAFT ASSEMBLY LH

(a) Using SST, remove the front drive shaft assembly LH.

SST 09520-01010, 09520-24010 (09520-32040)

NOTICE:

- **Be careful not to damage the transaxle case oil seal, inboard joint boot and drive shaft dust cover.**
- **Be careful not to drop the drive shaft assembly.**

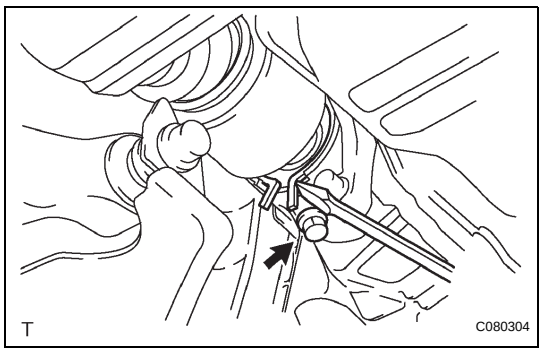

11. REMOVE FRONT DRIVE SHAFT ASSEMBLY RH (for 2WD)

(a) Using a screwdriver, remove the bearing brake hole snap ring.

(b) Remove the bolt and front drive shaft assembly RH from the drive shaft bearing bracket.

DS

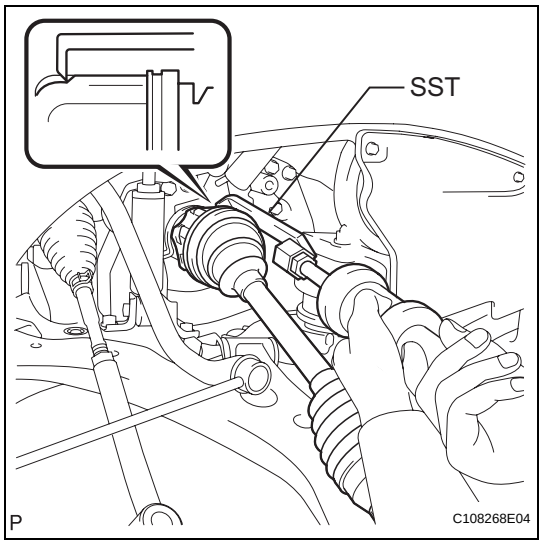

12. REMOVE FRONT DRIVE SHAFT ASSEMBLY RH (for 4WD)

(a) Using SST, remove the front drive shaft assembly RH.

SST 09520-01010, 09520-24010 (09520-32040)

HINT:

Overhaul the side following the same procedures as for the LH side.

NOTICE:

- **When removing and installing the front drive shaft assembly RH in 4WD vehicle, be sure to first drain all the transaxle oil and transfer oil. If removal and installation is carried out without draining these oils, the transfer oil will flow into the transaxle side. Extensive cleaning will be required if the two oils mix.**
- **Do not damage the oil seal and dust cover.**
- **Move the drive shaft assembly while keeping it level.**

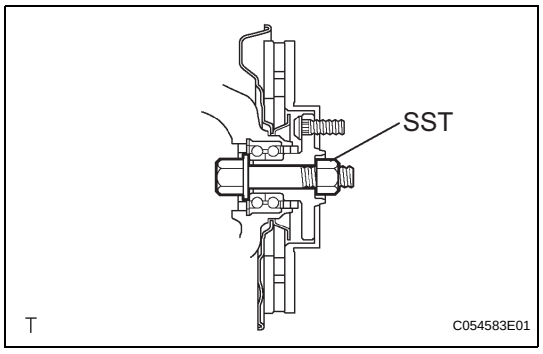

13. SECURE FRONT AXLE ASSEMBLY

NOTICE:

The hub bearing could be damaged if it is subjected to the vehicle weight, such as when moving the vehicle with the drive shaft removed. Therefore, if it is absolutely necessary to place the vehicle weight on the hub bearing, first support it with SST.

SST 09608-16042 (09608-02021, 09608-02041)

DISASSEMBLY

1. REMOVE NO. 2 FRONT AXLE INBOARD JOINT BOOT LH CLAMP

(a) Using pliers, remove the No. 2 front axle inboard joint boot LH clamp, as shown in the illustration.

2. REMOVE FRONT AXLE INBOARD JOINT BOOT LH CLAMP

(a) Remove the front axle inboard joint boot LH clamp using the same procedures as for the No. 2 front axle inboard joint boot LH clamp.

3. SEPARATE FR AXLE INBOARD JOINT BOOT

(a) Separate the inboard joint boot from the inboard joint assembly.

4. REMOVE FRONT DRIVE INBOARD JOINT ASSEMBLY LH

(a) Remove the grease from the inboard joint.

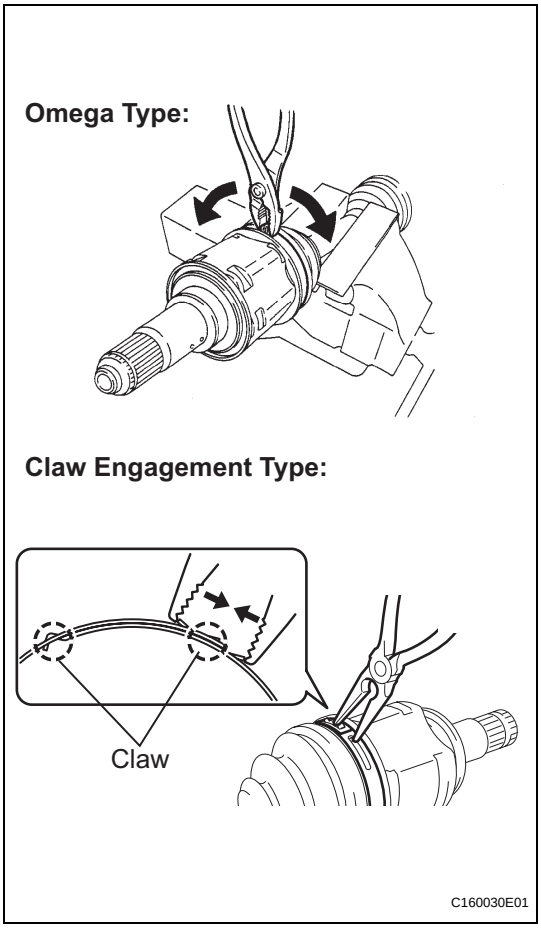

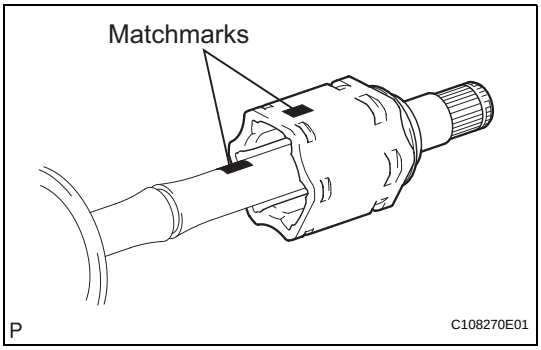

(b) Put matchmarks on the inboard joint shaft assembly and outboard joint shaft.
NOTICE:
Do not use a punch for the marks.

(c) Remove the inboard joint shaft assembly from the outboard joint shaft.

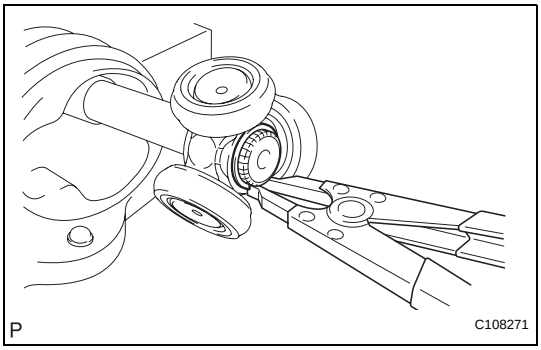

(d) Using a snap ring expander, remove the snap ring.

(e) Put matchmarks on the outboard joint shaft and tripod.
NOTICE:
Do not use a punch for the marks.

DS

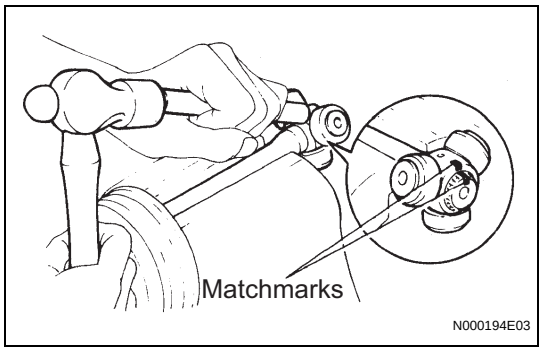

(f) Using a brass bar and hammer, remove the tripod from the outboard joint shaft.
NOTICE:
Do not tap the roller.

5. REMOVE FR AXLE INBOARD JOINT BOOT

(a) Remove the inboard joint boot and inboard joint boot clamp.

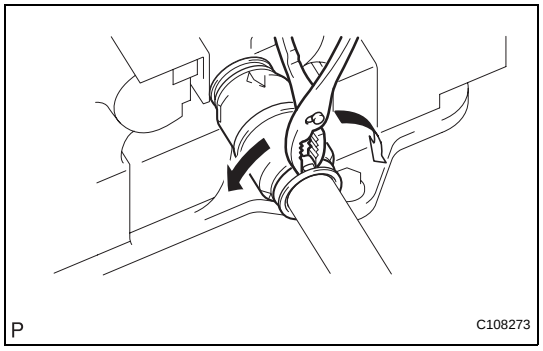

6. REMOVE FRONT DRIVE SHAFT DAMPER CLAMP

(a) Using pliers, remove the front drive shaft damper clamp, as shown in the illustration.

7. REMOVE FRONT DRIVE SHAFT DAMPER

(a) Remove the drive shaft damper.

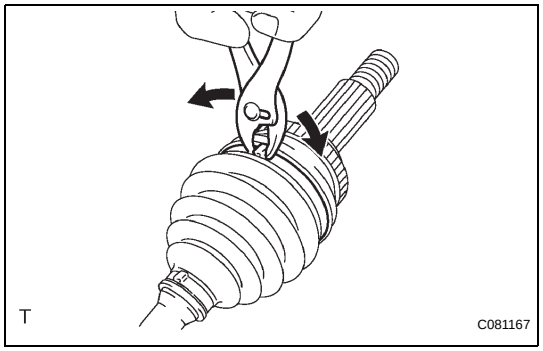

8. REMOVE OUTBOARD JOINT BOOT NO. 2 CLAMP

(a) Using pliers, remove the outboard joint boot No. 2 clamp, as shown in the illustration.

9. REMOVE OUTBOARD JOINT BOOT CLAMP

(a) Remove the outboard joint boot clamp perform the same procedures as for the outboard joint boot No. 2 clamp.

10. REMOVE OUTBOARD JOINT BOOT

(a) Remove the outboard joint boot from the outboard joint shaft.

(b) Remove the grease from the outboard joint.

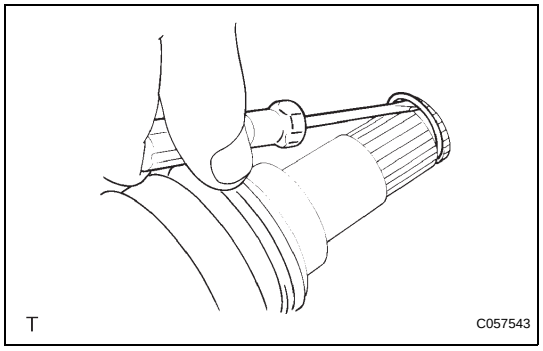

11. REMOVE FRONT DRIVE SHAFT LH HOLE SNAP RING

(a) Using a screwdriver, remove the front drive shaft LH hole snap ring.

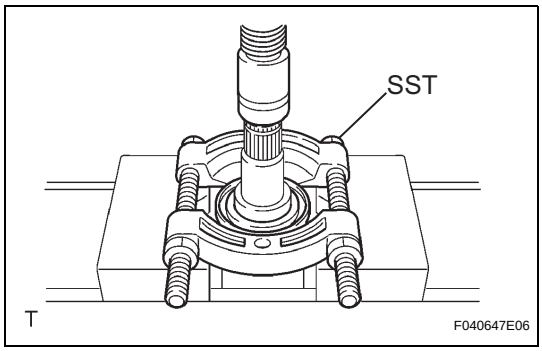

12. REMOVE FRONT DRIVE SHAFT DUST COVER LH

(a) Using SST and a press, remove the drive shaft dust cover LH.

SST 09950-00020

NOTICE:

Be careful not to drop the inboard joint assembly.

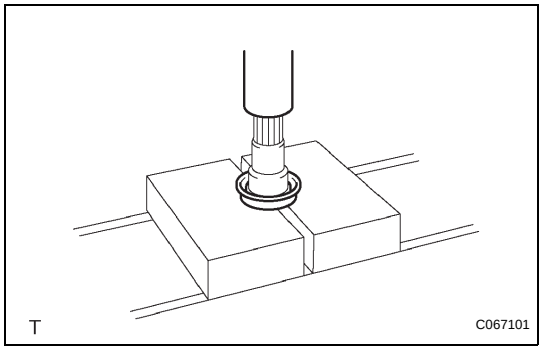

13. REMOVE FRONT DRIVE SHAFT DUST COVER RH (for 2WD)

(a) Using a press, remove the drive shaft dust cover RH.

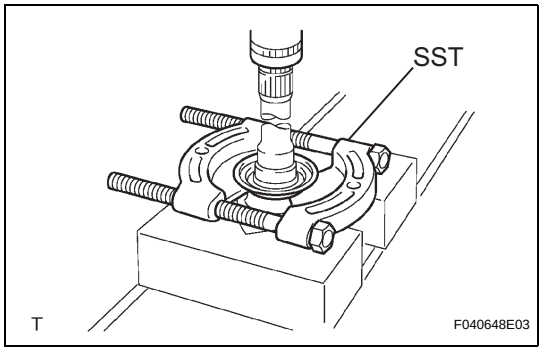

14. REMOVE FRONT DRIVE SHAFT DUST COVER RH (for 4WD)

(a) Using SST and a press, remove the drive shaft dust cover RH.

SST 09950-00020

NOTICE:

Be careful not to drop the inboard joint assembly.

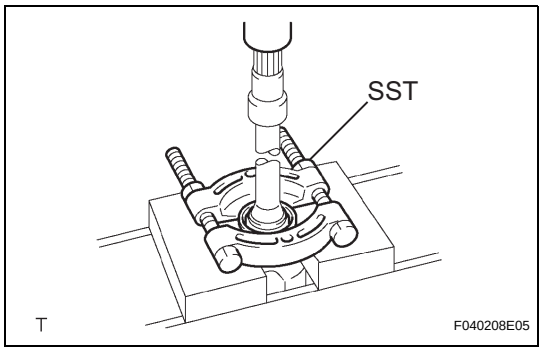

15. REMOVE FRONT DRIVE SHAFT DUST COVER

(a) Using SST and a press, remove the drive shaft dust cover.

SST 09950-00020

NOTICE:

Be careful not to drop the inboard joint assembly.

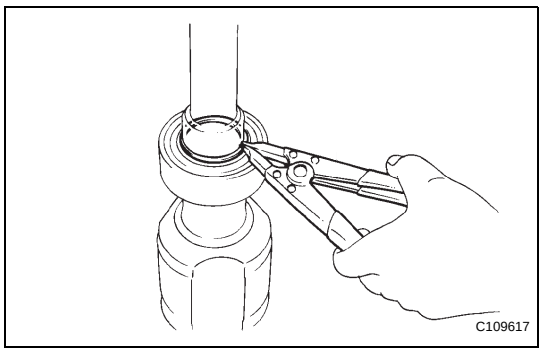

16. REMOVE FRONT DRIVE SHAFT RH HOLE SNAP RING

(a) Using a snap ring expander, remove the drive shaft RH hole snap ring.

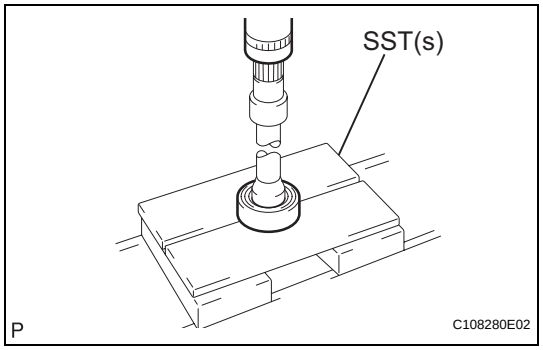

17. REMOVE FRONT DRIVE SHAFT BEARING

(a) Using SST and a press, remove the front drive shaft bearing.
SST 09527-10011

INSPECTION

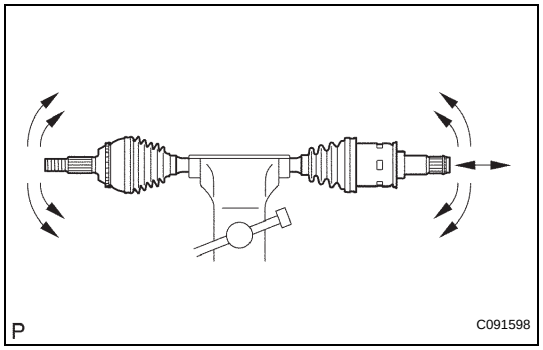

1. INSPECT FRONT DRIVE SHAFT ASSEMBLY LH

(a) Check that there is no remarkable play in the radial direction of the outboard joint.
(b) Check that the inboard joint slides smoothly in the thrust direction.
(c) Check that there is no remarkable play in the radial direction of the inboard joint.
(d) Check the boots for damage.

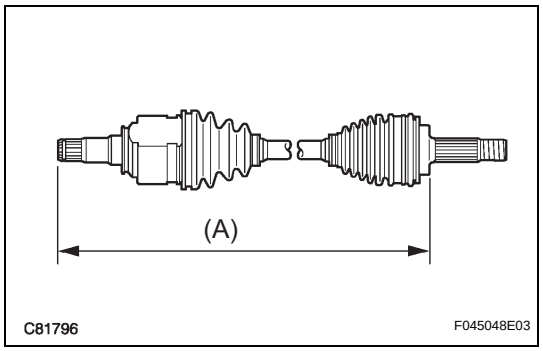

(e) For dimension (A), refer to the following table.

DRIVE TYPE	LH mm (in.)	RH mm (in.)
2WD	638.40 +- 5.0 (25.1338 +- 0.20)	957.00 +- 5.0 (37.6771 +- 0.20)
4WD	553.64 +- 5.0 (21.7968 +- 0.20)	992.24 +- 5.0 (39.0645 +- 0.20)

REASSEMBLY

1. INSTALL FRONT DRIVE SHAFT BEARING

(a) Using SST and a press, install a new front drive shaft bearing.
SST 09710-30021 (09710-03141), 09527-10011
NOTICE:
Bearing should be completely installed.

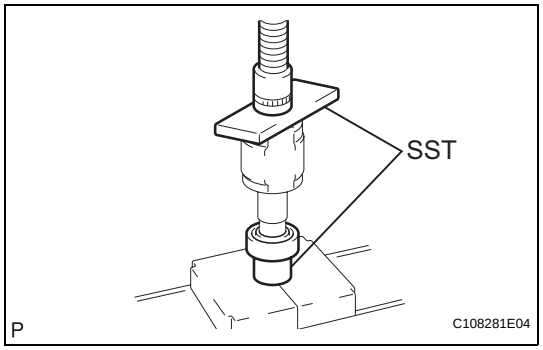

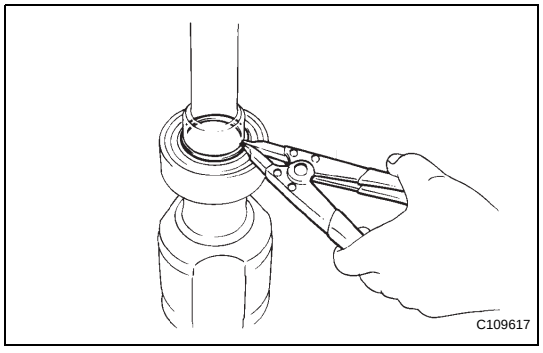

2. INSTALL FRONT DRIVE SHAFT RH HOLE SNAP RING

(a) Using a snap ring expander, install a new front drive shaft RH hole snap ring.

DS

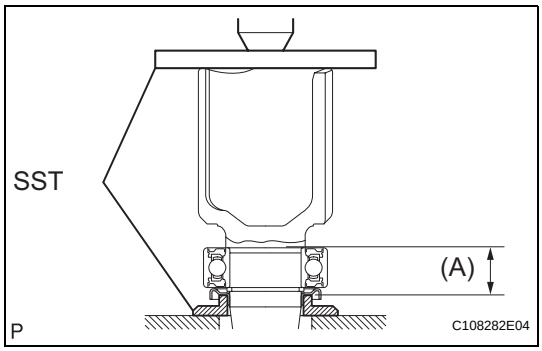

3. INSTALL FRONT DRIVE SHAFT DUST COVER

(a) Using SST and a press, install a new drive shaft dust cover until the distance from the tip of the center drive shaft to the drive shaft dust cover meets the specification, as shown in the illustration.

SST 09726-40010, 09527-10011

Distance (A):

26.8 to 27.4 mm (1.0551 to 1.0787 in.)

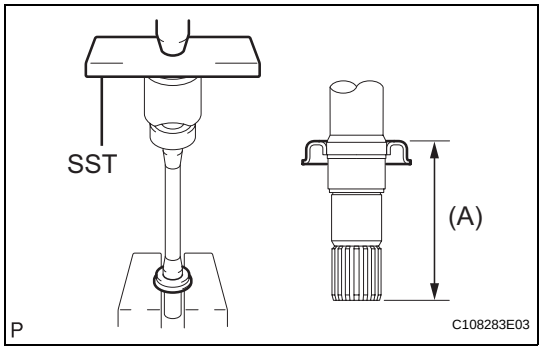

4. INSTALL FRONT DRIVE SHAFT DUST COVER RH (for 2WD)

(a) Using SST and a press, install a new drive shaft dust cover RH until the distance from the tip of the center drive shaft to the drive shaft dust cover RH meets the specification, as shown in the illustration.

SST 09527-10011

Distance:

109.5 mm (4.311 in.)

NOTICE:

- **Dust cover should be completely installed.**
- **Be careful not to damage the dust cover.**

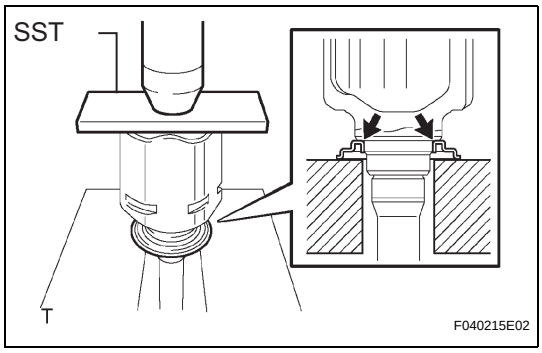

5. INSTALL FRONT DRIVE SHAFT DUST COVER RH (for 4WD)

(a) Using SST and a press, install a new drive shaft dust cover RH.

SST 09527-10011

NOTICE:

- **Dust cover should be completely installed.**
- **Be careful not to damage the dust cover.**

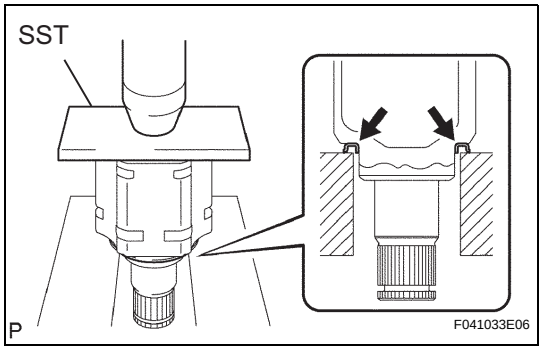

6. INSTALL FRONT DRIVE SHAFT DUST COVER LH

(a) Using SST and a press, install a new drive shaft dust cover LH.

SST 09527-10011

NOTICE:

- **Dust cover should be completely installed.**
- **Be careful not to damage the dust cover.**

7. INSTALL FRONT DRIVE SHAFT LH HOLE SNAP RING

(a) Install a new hole snap ring to the inboard joint shaft assembly.

8. INSTALL OUTBOARD JOINT BOOT

HINT:

Before installing the boots, wrap the spline of the drive shaft with vinyl tape to prevent the boots from being damaged.

DS

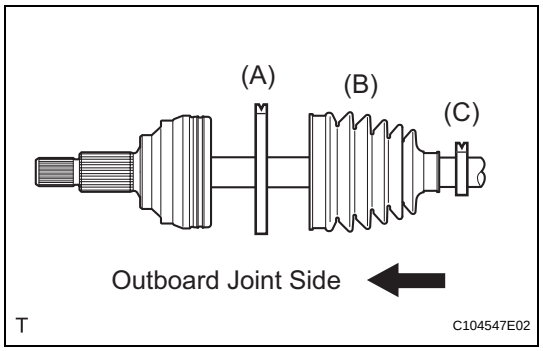

(a) Install new parts to the outboard joint shaft assembly in the following order.
  (1) Outboard joint boot No. 2 clamp (A)
  (2) Outboard joint boot (B)
  (3) Outboard joint boot clamp (C)

(b) Pack the outboard joint shaft and boot with grease.

Drive type	Grease capacity g (oz.)
2WD	35 to 55 g (1.2 to 1.9 oz.)
4WD	40 to 60 g (1.4 to 2.1 oz.)

9. INSTALL OUTBOARD JOINT BOOT NO. 2 CLAMP

(a) Hold the outboard joint shaft assembly between aluminium plates in a vise.
NOTICE:
Do not overtighten the vise.

(b) Install the outboard joint boot No. 2 clamp onto the boot.

(c) Place SST onto the outboard joint boot No. 2 clamp.
SST 09521-24010

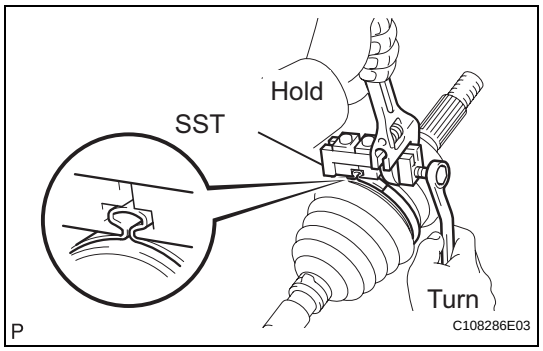

(d) Tighten the SST so that the outboard joint boot No. 2 clamp is pinched.
SST 09521-24010
NOTICE:
Do not overtighten the SST.

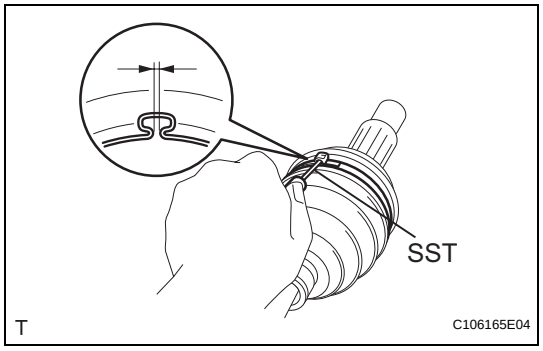

(e) Using SST, measure the clearance of the outboard joint boot No. 2 clamp.
SST 09240-00020
Clearance:
0.8 mm (0.031 in.) or less
NOTICE:
When the measured value is greater than the specified value, retighten the clamp.

10. INSTALL OUTBOARD JOINT BOOT CLAMP

(a) Install the outboard joint boot clamp perform the same procedures as for the outboard joint boot No. 2 clamp.

11. INSTALL FRONT DRIVE SHAFT DAMPER

(a) Install the drive shaft damper to the drive shaft.

(b) Make sure that the damper is on the shaft groove.

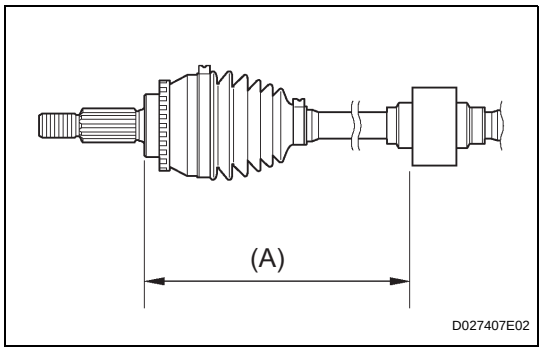

(c) Set the distance, as specified below.
Distance:
221.0 +- 2.0 mm (8.701 +- 0.079 in.)

12. INSTALL FRONT DRIVE SHAFT DAMPER RH CLAMP

(a) Hold the outboard joint shaft assembly between aluminium plates in a vise.
NOTICE:
Do not overtighten the vise.

(b) Install the drive shaft damper clamp to the damper.
NOTICE:
Be sure to install the clamp in the correct position.

(c) Place SST onto the drive shaft damper clamp.
SST 09521-24010

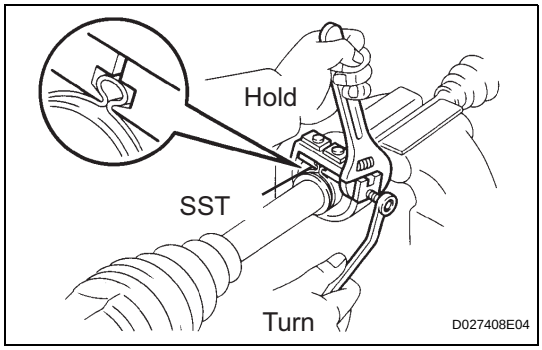

(d) Tighten the SST so that the clamp is pinched.
SST 09521-24010
NOTICE:
Do not overtighten the SST.

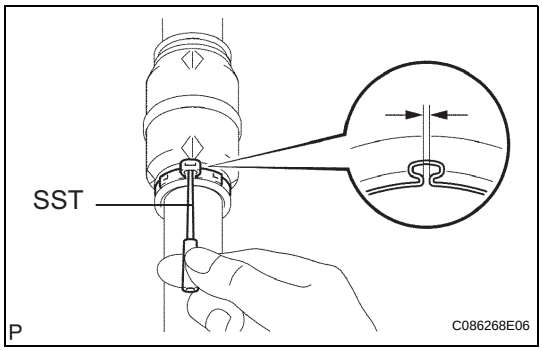

(e) Using SST, measure the clearance of the drive shaft damper clamp.
SST 09240-00020
Clearance:
0.8 mm (0.031 in.) or less
NOTICE:
Using SST, measure the clearance of the drive shaft damper clamp.

13. INSTALL INBOARD JOINT ASSEMBLY

(a) Install new parts to the inboard joint shaft assembly in the following order.
(1) Inboard joint boot clamp (A)
(2) Inboard joint boot (B)
(3) Inboard joint boot No. 2 clamp (C)

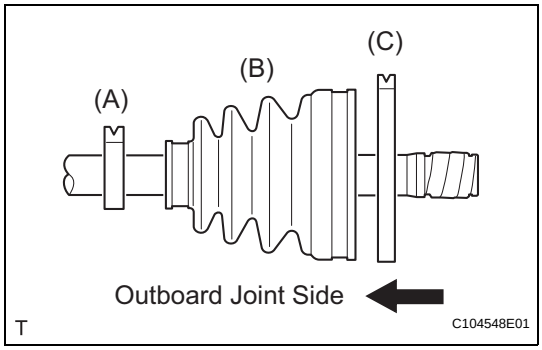

(b) Hold the outboard joint shaft assembly between aluminium plates in a vise.
NOTICE:
Do not overtighten the vise.

(c) Place the beveled side of the tripod axial spline toward the outboard joint shaft.

DS

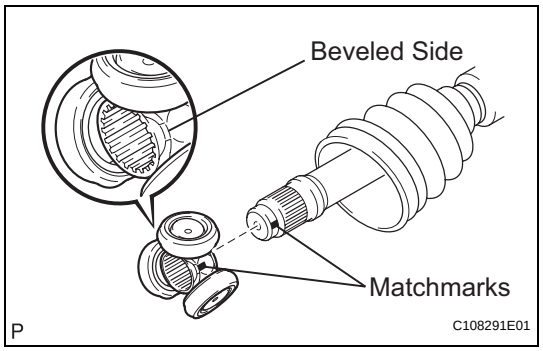

(d) Align the matchmarks.

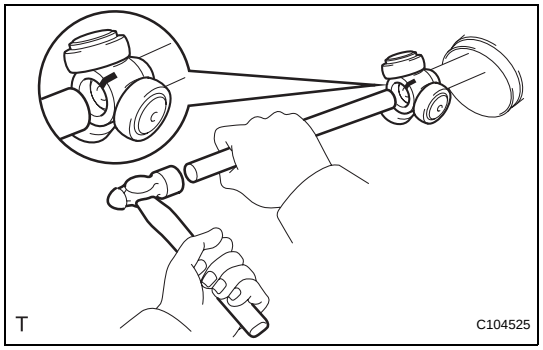

(e) Using a brass bar and hammer, tap in the tripod to the outboard joint shaft.
NOTICE:
- **Do not tap the roller.**
- **Be sure to install the tripod in the correct direction.**

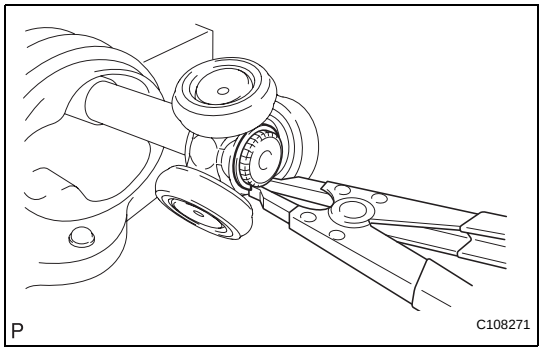

(f) Using a snap ring expander, install a new front inner shaft snap ring.
(g) Pack the inboard joint shaft and boot with grease.

Drive type	Grease capacity g (oz.)
2WD	95 to 115 g (3.4 to 4.1 oz.)
4WD	100 to 130 g (3.9 to 4.6 oz.)

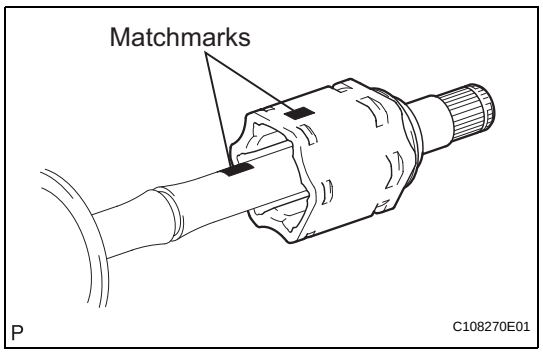

(h) Align the matchmarks, install the inboard joint assembly to the outboard joint shaft assembly.

14. INSTALL FR AXLE INBOARD JOINT BOOT

(a) Install the inboard joint boot to the inboard joint assembly.

15. INSTALL NO. 2 FRONT AXLE INBOARD JOINT BOOT LH CLAMP

(a) Hold the outboard joint shaft assembly between aluminium plates in a vise.
NOTICE:
Do not overtighten the vise.
(b) Install the No. 2 front axle inboard joint boot LH clamp onto the boot.
(c) for Omega Type:
(1) Place SST onto the No. 2 front axle inboard joint boot LH clamp.
SST 09521-24010

DS

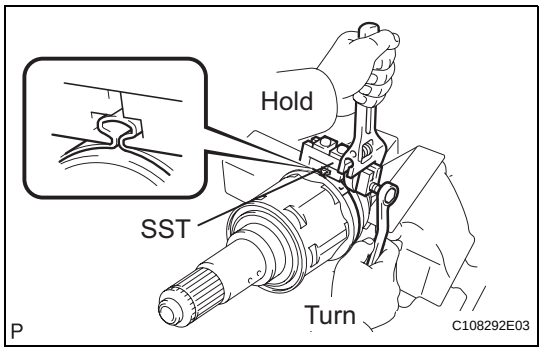

(2) Tighten the SST so that the No. 2 front axle inboard joint boot LH clamp is pinched.
SST 09521-24010
NOTICE:
Do not overtighten the SST.

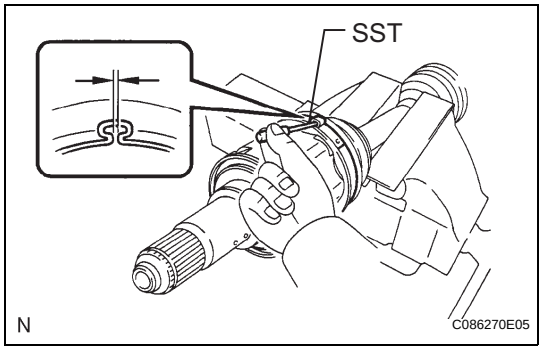

(3) Using SST, measure the clearance of the No. 2 front axle inboard joint boot LH clamp.
SST 09240-00020
Clearance:
0.8 mm (0.031 in.) or less
NOTICE:
When the measured value is greater than the specified value, retighten the clamp.

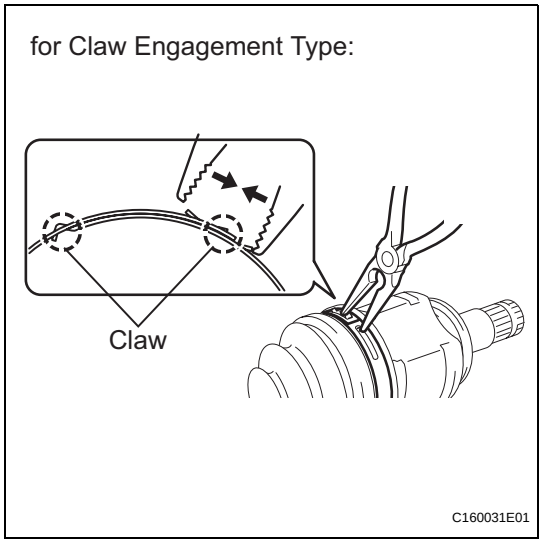

(d) for claw engagement type:
(1) Using needle nose pliers, install the No. 2 front axle inboard joint boot clamp as shown in the illustration.

16. INSTALL FRONT AXLE INBOARD JOINT BOOT LH CLAMP

(a) Install the front axle inboard joint boot LH clamp perform the same procedures as for the No. 2 front axle inboard joint boot LH clamp.

DS

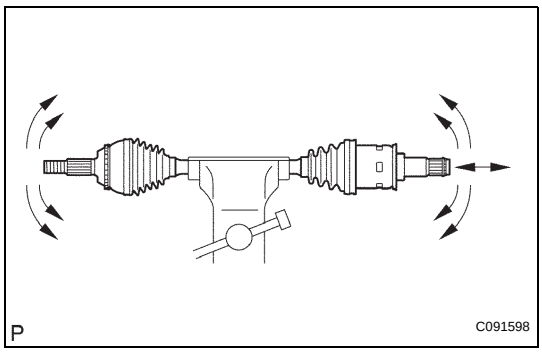

17. INSPECT FRONT DRIVE SHAFT ASSEMBLY

(a) Check that there is no excessive play in the outboard joint.
(b) Check that the inboard joint slides smoothly in the thrust direction.
(c) Check that there is no excessive play in the radial directions of the inboard joint.

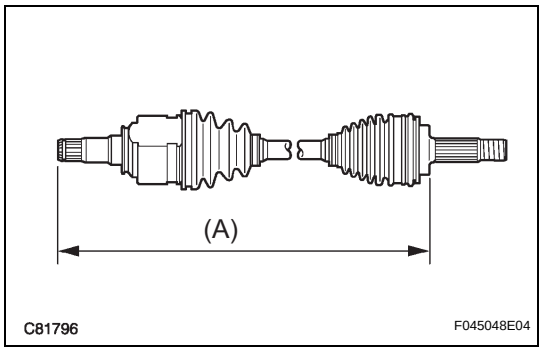

(d) Check the boots for damage.
HINT:
For dimension (A), refer to the following table.

DRIVE TYPE	LH mm (in.)	RH mm (in.)
2WD	638.40 +- 5.0 (25.1338 +- 0.20)	957.00 +- 5.0 (37.6771 +- 0.20)
4WD	553.64 +- 5.0 (21.7968 +- 0.20)	992.24 +- 5.0 (39.0645 +- 0.20)