REMOVAL

1. **REMOVE REAR WHEEL**
2. **REMOVE TAIL EXHAUST PIPE ASSEMBLY (See page EX-8)**
3. **SEPARATE REAR SPEED SENSOR**
   (a) Remove the bolt and the speed sensor from the axle carrier.
   NOTICE:
   - **Be careful not to damage the speed sensor.**
   - **Prevent foreign matter from adhering to the speed sensor.**

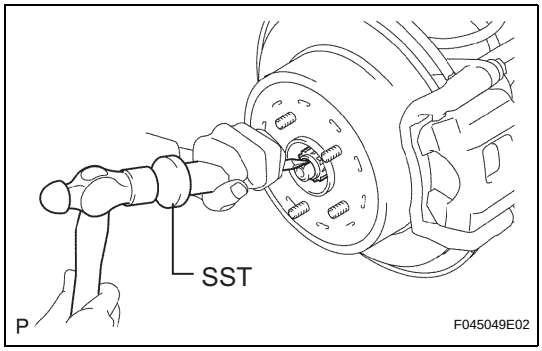

4. **REMOVE REAR AXLE SHAFT NUT**
   (a) Using SST and a hammer, unstake part of the axle shaft nut.
   SST 09930-00010
   NOTICE:
   Loosen the staked part of the nut completely, otherwise the screw of the drive shaft may be damaged.
   (b) While apply the brakes, remove the axle shaft nut.

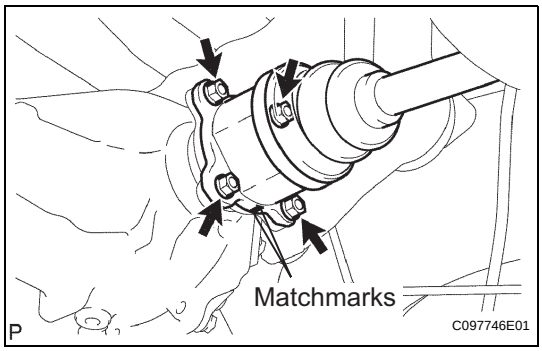

5. **REMOVE REAR DRIVE SHAFT ASSEMBLY LH**
   (a) Place matchmarks on the drive shaft and differential side gear shaft.
   (b) Remove the 4 nuts and washers, and disconnect the drive shaft from the differential side gear shaft.
   (c) Remove the drive shaft from the axle carrier.

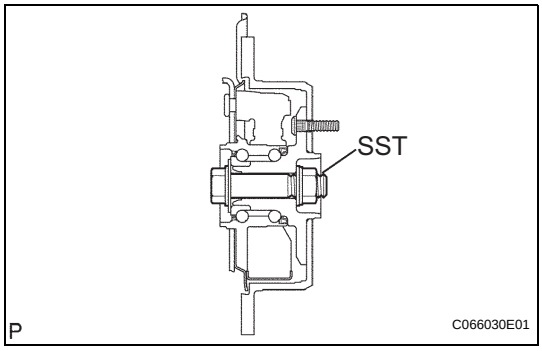

6. **SECURE REAR AXLE ASSEMBLY**
   NOTICE:
   - **After disconnecting the drive shaft from the axle hub, work carefully so as not to damage the ABS speed sensor rotor serration on the drive shaft.**
   - **The hub bearing could be damaged if it is subjected to the vehicle weight, such as when moving the vehicle with the drive shaft removed. Therefore, if it is absolutely necessary to place the vehicle weight on the hub bearing, first support it with SST.**

   SST 09608-16042 (09608-02021, 09608-02041)

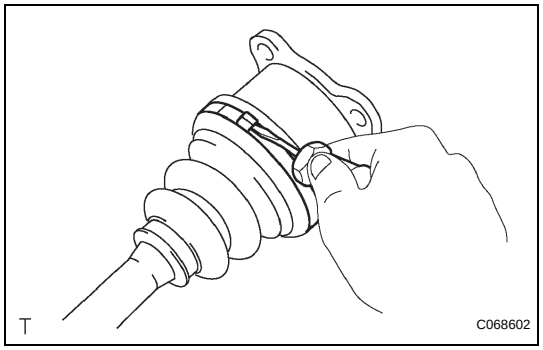

DISASSEMBLY

1. SEPARATE REAR DRIVE SHAFT INBOARD JOINT BOOT CLAMP

(a) Using a screwdriver, remove the 2 rear drive shaft inboard joint boot clamps as shown in the illustration.

2. SEPARATE REAR DRIVE SHAFT INBOARD JOINT BOOT

(a) Separate the rear drive shaft inboard joint boot from the inboard joint assembly.

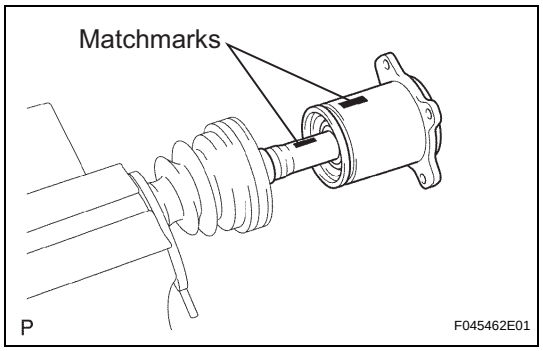

3. REMOVE REAR DRIVE SHAFT INBOARD JOINT ASSEMBLY

(a) Put matchmarks on the inboard joint assembly and outboard joint shaft.
NOTICE:
Do not use a punch for the marks.

(b) Pull out the inboard joint assembly.
NOTICE:
Be careful not to drop the balls.

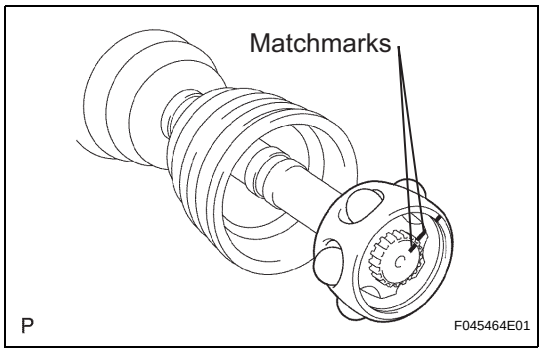

(c) Place matchmarks on the outboard joint shaft, inner race and cage.
NOTICE:
Do not punch the marks.

(d) Remove the 6 bolts.

(e) Slide the cage toward outboard joint.

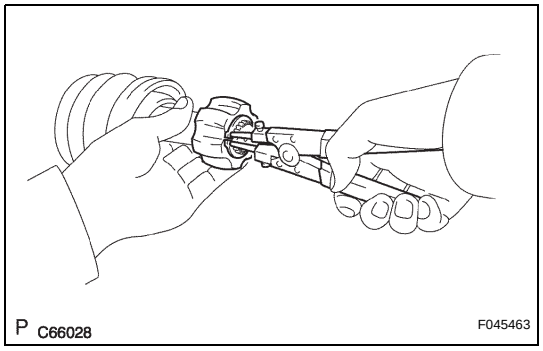

(f) Using a snap ring expander, remove the snap ring.

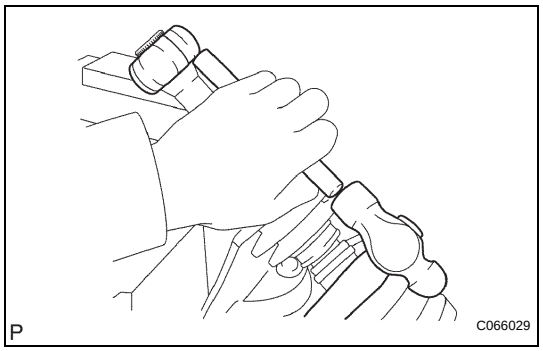

(g) Using a brass bar and hammer, remove the inner race.

(h) Remove the cage.

(i) Remove the inboard joint boot, inboard joint boot clamp and inboard joint boot No. 2 clamp.

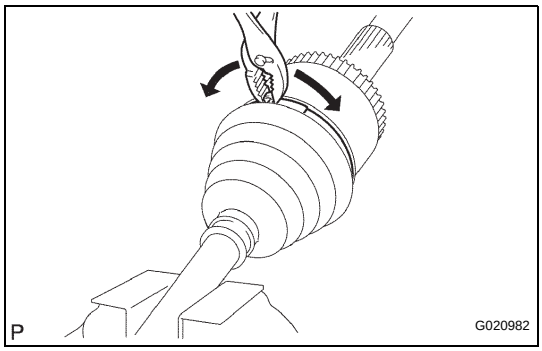

4. REMOVE REAR DRIVE SHAFT OUTBOARD JOINT BOOT CLAMP

(a) Using pliers, remove the 2 rear drive shaft outboard joint boot clamps as shown in the illustration.

5. REMOVE REAR DRIVE SHAFT OUTBOARD JOINT BOOT

(a) Remove the outboard joint boot from the outboard joint shaft.

(b) Remove the old grease from the outboard joint.

NOTICE:

Do not disassemble the outboard joint.

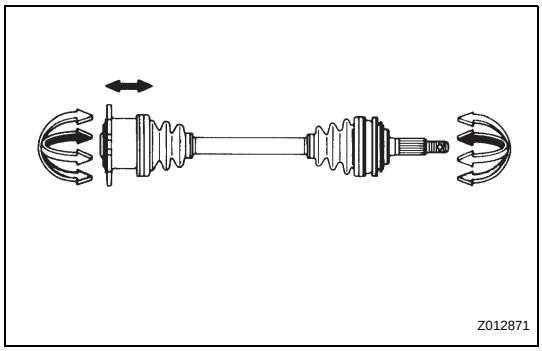

INSPECTION

1. INSPECT REAR DRIVE SHAFT ASSEMBLY LH

(a) Check that there is no remarkable play in the radial direction of the outboard joint.

(b) Check that the inboard joint slides smoothly in the thrust direction.

(c) Check that there is no remarkable play in the radial direction of the inboard joint.

(d) Check the boots for damage.

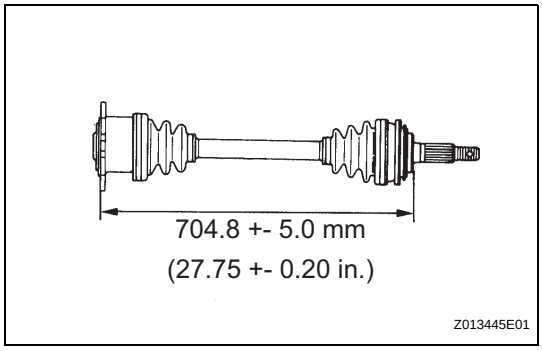

(e) Make sure that the 2 boots are not stretched or contracted when the drive shaft is at standard length.

Standard length:

704.8 +- 5.0 mm (27.748 +- 0.20 in.)