INSTALLATION

1. INSTALL REAR DIFFERENTIAL DRIVE PINION BEARING SPACER

(a) Install a new bearing spacer.

2. INSTALL REAR DRIVE PINION FRONT TAPERED ROLLER BEARING

(a) Install the tapered roller bearing.

3. INSTALL REAR DIFFERENTIAL DRIVE PINION OIL SLINGER

(a) Install the oil slinger, as shown in the illustration.

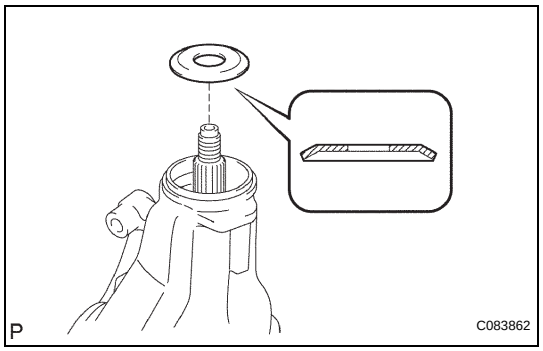

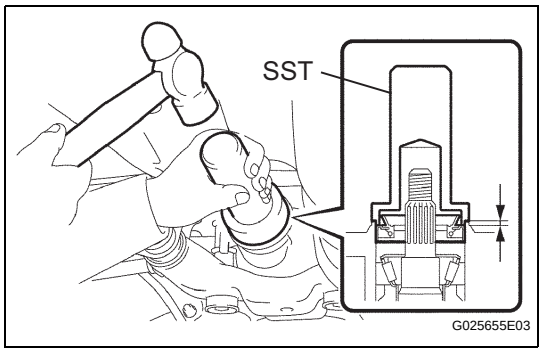

4. INSTALL REAR DIFFERENTIAL CARRIER OIL SEAL

(a) Using SST and a hammer, install a new oil seal.

SST 09554-22010

Oil seal drive in depth:

2.0 +- 0.3 mm (0.079 +- 0.012 in.)

(b) Coat MP grease to the oil seal lip.

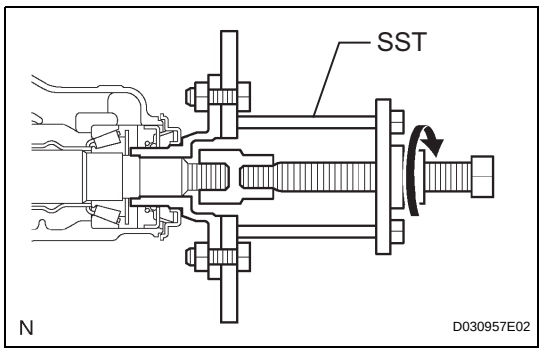

5. INSTALL REAR DRIVE PINION COMPANION FLANGE SUB-ASSEMBLY

(a) Using SST, install the companion flange on the shaft.

SST 09950-30012 (09951-03010, 09953-03010, 09954-03010, 09955-03030, 09956-03020)

NOTICE:

Apply hypoid gear oil to the SST center bolt tip and threads before use.

6. INSTALL REAR DRIVE PINION NUT

(a) Coat the threads of a new nut with hypoid gear oil LSD.

(b) Using SST to hold the flange, torque the nut.

SST 09330-00021

Torque: 108 N*m (1,100 kgf*cm, 80 ft.*lbf)

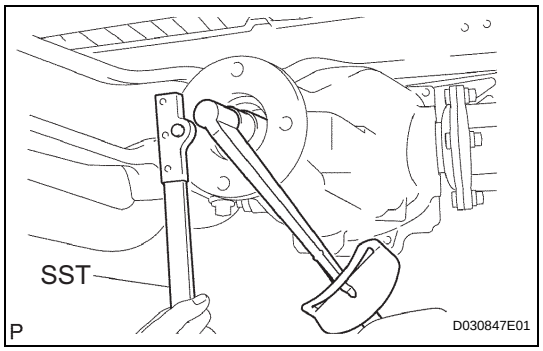

7. INSPECT DIFFERENTIAL DRIVE PINION PRELOAD

(a) Inspect differential drive pinion preload (See page DF-31).

(b) Using a chisel and a hammer, stake the drive pinion nut.

DF

8. **INSTALL REAR DIFFERENTIAL DRAIN PLUG**
   (a) Using a hexagon wrench (10 mm), install the filler plug with a new gasket.
   Torque: 49 N*m (500 kgf*cm, 36 ft.*lbf)

9. **ADD DIFFERENTIAL OIL**
   (a) Fill the rear differential carrier assembly with hypoid gear oil.

10. **INSPECT DIFFERENTIAL OIL**
    HINT:
    (See page DF-3)

11. **INSTALL REAR DIFFERENTIAL FILLER PLUG**
    (a) Using a hexagon wrench (10 mm), install the filler plug with a new gasket.
    Torque: 49 N*m (500 kgf*cm, 36 ft.*lbf)

12. **INSTALL PROPELLER WITH CENTER BEARING SHAFT ASSEMBLY**
    (a) Install propeller with center bearing shaft assembly (See page PR-9).
    (b) Fully tighten propeller with center bearing shaft assembly (See page PR-10).

13. **INSTALL EXHAUST PIPE ASSEMBLY**
    HINT:
    (See page EX-10)

14. **INSPECT FOR EXHAUST GAS LEAK**
    HINT:
    (See page EX-12)