REMOVAL

1. **REMOVE REAR WHEEL**
2. **REMOVE EXHAUST PIPE ASSEMBLY**
   HINT:
   (See page EX-8)
3. **REMOVE PROPELLER WITH CENTER BEARING SHAFT ASSEMBLY**
   HINT:
   (See page PR-3)
4. **REMOVE REAR DIFFERENTIAL FILLER PLUG**
   (a) Using a hexagon wrench (10 mm), remove the filler plug and gasket.
5. **REMOVE REAR DIFFERENTIAL DRAIN PLUG**
   (a) Using a hexagon wrench (10 mm), remove the drain plug and gasket, and drain the oil.
6. **REMOVE REAR SPEED SENSOR LH**
   HINT:
   Removal procedure or RH side is the same as that or LH side. (See page DS-21)
7. **REMOVE REAR AXLE SHAFT NUT LH**
   HINT:
   Removal procedure or RH side is the same as that or LH side. (See page DS-21)
8. **REMOVE REAR DRIVE SHAFT ASSEMBLY LH**
   HINT:
   Removal procedure or RH side is the same as that or LH side. (See page DS-21)
9. **REMOVE REAR DIFFERENTIAL CARRIER ASSEMBLY**
   (a) Support the rear differential carrier assembly with a jack.
   (b) Remove the bolt and nut, separate the No. 1 rear differential support.

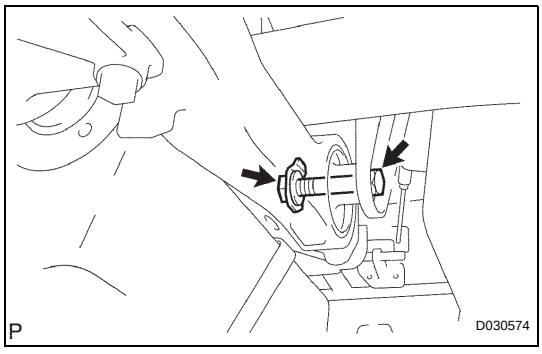

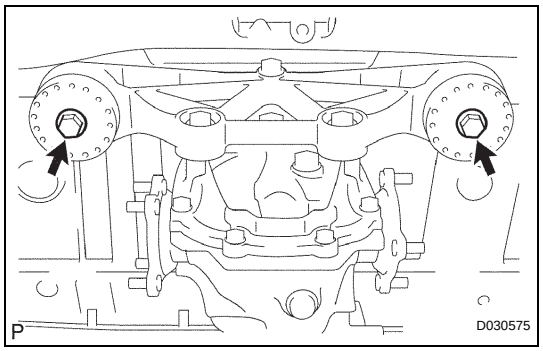

(c) Remove the 2 bolts, separate the rear differential support assembly.
NOTICE:
Be careful not to drop the rear differential carrier assembly.

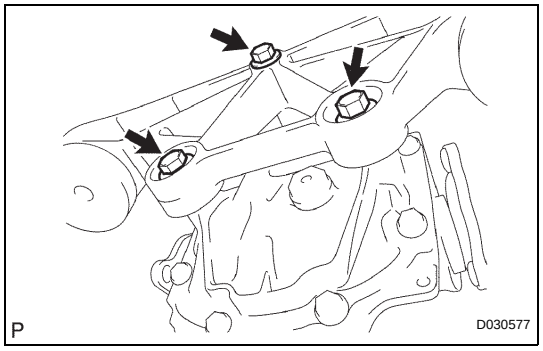

10. REMOVE REAR DIFFERENTIAL SUPPORT ASSEMBLY

(a) Remove the 3 bolts and rear differential support assembly.

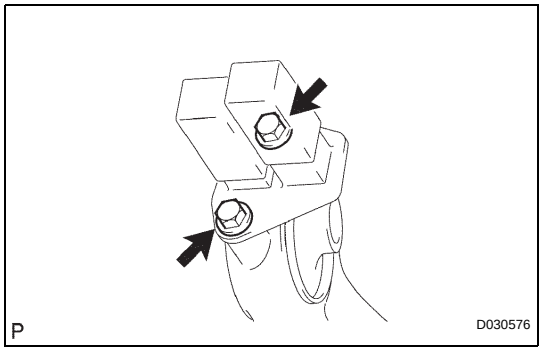

11. REMOVE REAR DIFFERENTIAL DYNAMIC DAMPER

(a) Remove the 2 bolts and rear differential dynamic damper from the No. 1 rear differential support.

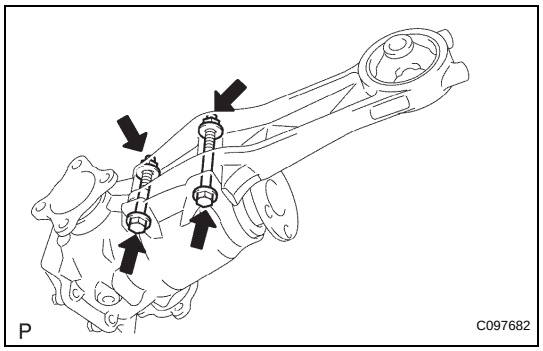

12. REMOVE NO. 1 REAR DIFFERENTIAL SUPPORT

(a) Remove the 2 bolts, 2 nuts and No. 1 rear differential support.

DF

INSTALLATION

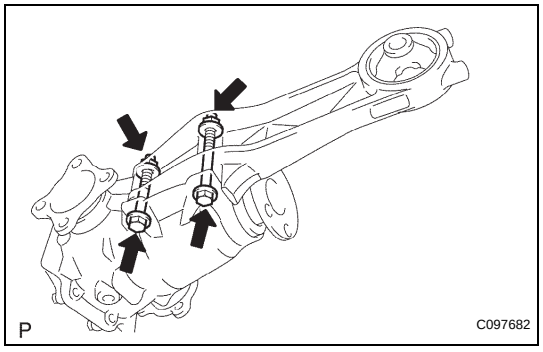

1. INSTALL NO. 1 REAR DIFFERENTIAL SUPPORT

(a) Install the No. 1 rear differential support to the rear differential carrier assembly with the 2 bolts and 2 nuts.
Torque: 85 N*m (867 kgf*cm, 63 ft.*lbf)
HINT:
Hold the bolt and tighten the nut.

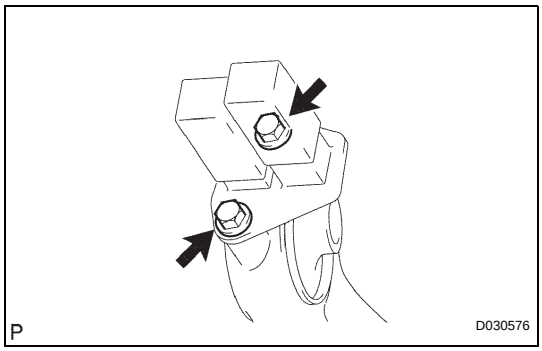

2. INSTALL REAR DIFFERENTIAL DYNAMIC DAMPER

(a) Install the rear differential dynamic damper to the No. 1 rear differential support with the 2 bolts.
Torque: 20 N*m (204 kgf*cm, 15 ft.*lbf)

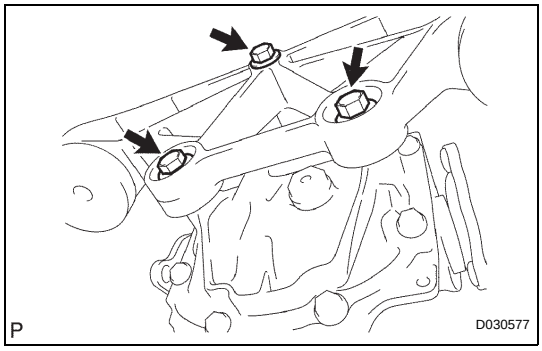

3. INSTALL REAR DIFFERENTIAL SUPPORT ASSEMBLY

(a) Install the rear differential support assembly to rear differential carrier assembly with the 3 bolts.
Torque: 100 N*m (1,020 kgf*cm, 74 ft.*lbf)

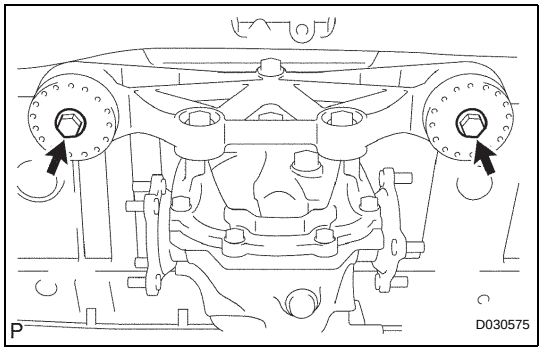

4. INSTALL REAR DIFFERENTIAL CARRIER ASSEMBLY

(a) Jack up the rear differential carrier assembly.
(b) Install the rear differential carrier assembly with the 2 bolts.
Torque: 106 N*m (1,081 kgf*cm, 78 ft.*lbf)

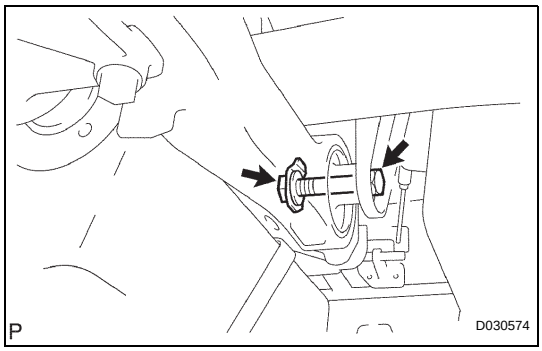

(c) Connect the No. 1 rear differential support with the bolt and nut.
Torque: 95 N*m (969 kgf*cm, 70 ft.*lbf)
HINT:
Tighten the bolt.

5. INSTALL REAR DRIVE SHAFT ASSEMBLY LH

HINT:
Install procedure of RH side is the same as that of LH side. (See page DS-26)

6. INSTALL REAR AXLE SHAFT NUT LH

HINT:
Install procedure of RH side is the same as that of LH side. (See page DS-26)

7. INSTALL REAR SPEED SENSOR LH

HINT:
Install procedure of RH side is the same as that of LH side. (See page DS-26)

8. INSTALL PROPELLER WITH CENTER BEARING SHAFT ASSEMBLY (See page PR-9)

9. **FULLY TIGHTEN PROPELLER WITH CENTER BEARING SHAFT ASSEMBLY (See page PR-10)**

10. **INSTALL REAR DIFFERENTIAL DRAIN PLUG**
    (a) Using a hexagon wrench (10 mm), install the drain plug with a new gasket.
    Torque: 49 N*m (500 kgf*cm, 36 ft.*lbf)

11. **ADD DIFFERENTIAL OIL**
    (a) Fill the rear differential carrier assembly with hypoid gear oil.

12. **INSPECT DIFFERENTIAL OIL**
    HINT:
    (See page DF-3)

13. **INSTALL REAR DIFFERENTIAL FILLER PLUG**
    (a) Using a hexagon wrench (10 mm), install the filler plug with a new gasket.
    Torque: 49 N*m (500 kgf*cm, 36 ft.*lbf)

14. **INSTALL REAR WHEEL**
    Torque: 103 N*m (1,050 kgf*cm, 76 ft.*lbf)

15. **INSTALL EXHAUST PIPE ASSEMBLY**
    HINT:
    (See page EX-10)

16. **INSPECT FOR EXHAUST GAS LEAK**
    HINT:
    (See page EX-12)

17. **INSPECT AND ADJUST REAR WHEEL ALIGNMENT**
    HINT:
    (See page SP-4)

18. **INSPECT ABS SPEED SENSOR SIGNAL**
    HINT:
    (See page BC-3)