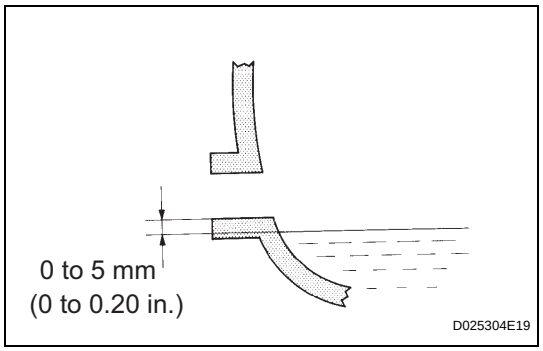

DIFFERENTIAL OIL

ADJUSTMENT

1. INSPECT DIFFERENTIAL OIL

(a) Stop the vehicle on the level place.

(b) Remove the differential filler plug and gasket.

(c) Check that the oil surface is within 5 mm (0.20 in.) from the lowest position of the inner surface of the differential filler plug opening.

NOTICE:

- **Excessively large or small amount of oil may cause troubles.**
- **After replacing oil, drive the vehicle and check the oil level.**

(d) Check for oil leakage when the oil level is low.

(e) Install the differential filler plug and a new gasket.

Torque: 49 N*m (500 kgf*cm, 36 ft.*lbf)