REAR DIFFERENTIAL CARRIER OIL SEAL

COMPONENTS

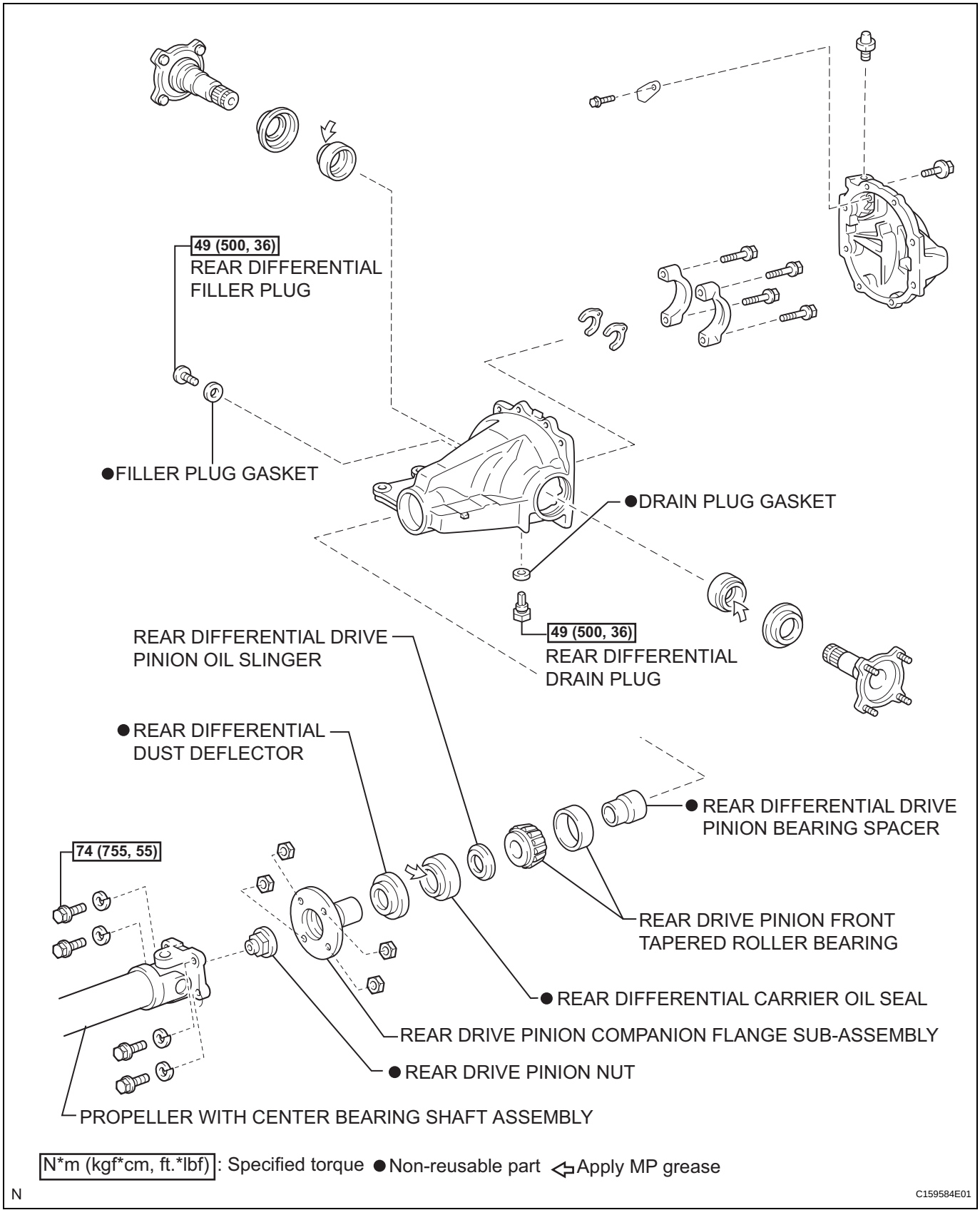

N*m (kgf*cm, ft.*lbf): Specified torque ● Non-reusable part ⇦ Apply MP grease

N

C159584E01

DF

REMOVAL

1. **REMOVE FRONT EXHAUST PIPE ASSEMBLY**
   HINT:
   (See page EX-8)

2. **REMOVE PROPELLER WITH CENTER BEARING SHAFT ASSEMBLY**
   HINT:
   (See page PR-3)

3. **REMOVE REAR DIFFERENTIAL FILLER PLUG**
   (a) Using a hexagon wrench (10 mm), remove the filler plug and gasket.

4. **REMOVE REAR DIFFERENTIAL DRAIN PLUG**
   (a) Using a hexagon wrench (10 mm), remove the drain plug and gasket, and drain the oil.

5. **REMOVE REAR DRIVE PINION NUT**
   (a) Using a chisel and a hammer, unstake the staked part of the nut.

   (b) Using SST to hold the flange, remove the nut.
   SST 09330-00021

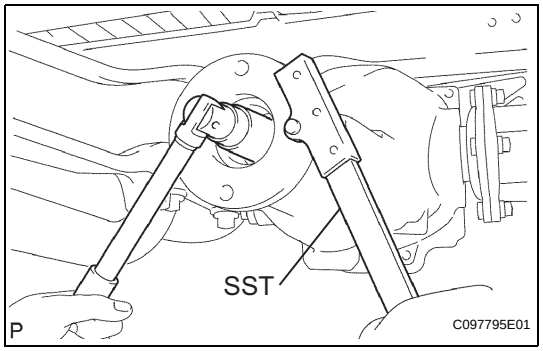

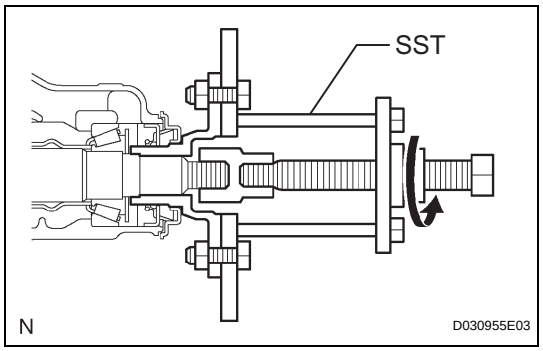

6. **REMOVE REAR DRIVE PINION COMPANION FLANGE SUB-ASSEMBLY**
   (a) Using SST, remove the companion flange.
   SST 09950-30012 (09951-03010, 09953-03010, 09954-03010, 09955-03030, 09956-03020)

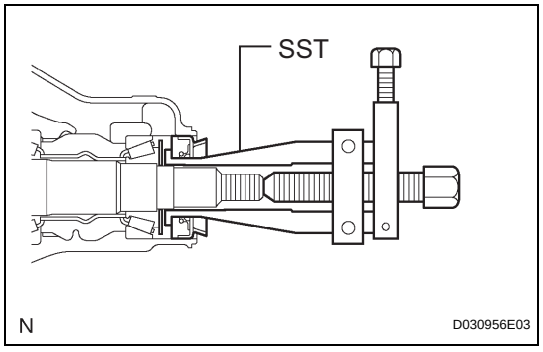

7. **REMOVE REAR DIFFERENTIAL CARRIER OIL SEAL**
   (a) Using SST, remove the oil seal.
   SST 09308-10010

8. **REMOVE REAR DIFFERENTIAL DRIVE PINION OIL SLINGER**

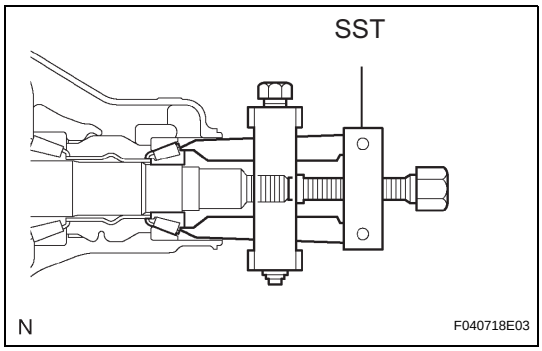

9. REMOVE REAR DRIVE PINION FRONT TAPERED ROLLER BEARING

(a) Using SST, remove the front tapered roller bearing.
SST 09556-22010

10. REMOVE REAR DIFFERENTIAL DRIVE PINION BEARING SPACER