REAR DIFFERENTIAL SIDE GEAR SHAFT BOLT

REMOVAL

1. **REMOVE REAR WHEEL**
2. **REMOVE EXHAUST PIPE ASSEMBLY**
   HINT:
   Perform this procedure only when removing the RH side.
   (See page EX-8)
3. **REMOVE REAR SPEED SENSOR LH**
   HINT:
   (See page DS-21)
4. **REMOVE REAR AXLE SHAFT NUT LH**
   HINT:
   (See page DS-21)
5. **REMOVE REAR DRIVE SHAFT ASSEMBLY LH**
   HINT:
   (See page DS-21)
6. **REMOVE REAR DIFFERENTIAL SIDE GEAR SHAFT BOLT**
   (a) Using SST and wood block, remove the rear differential side gear shaft bolt.
   SST 09611-12010

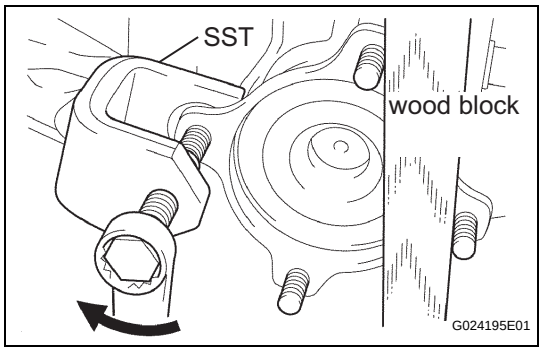

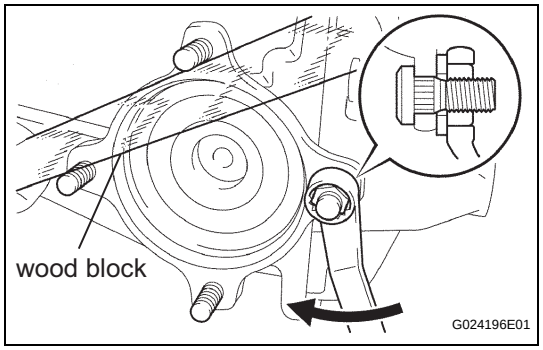

INSTALLATION

1. **INSTALL REAR DIFFERENTIAL SIDE GEAR SHAFT BOLT**
   (a) Install the bolt tightening the nut through the plate washer.
2. **INSTALL REAR DRIVE SHAFT ASSEMBLY LH**
   HINT:
   (See page DS-26)
3. **INSTALL REAR AXLE SHAFT NUT LH**
   HINT:
   (See page DS-26)
4. **INSTALL REAR SPEED SENSOR LH**
   HINT:
   (See page DS-26)
5. **INSTALL EXHAUST PIPE ASSEMBLY**
   HINT:
   (See page EX-10)
6. **INSTALL REAR WHEEL**
   Torque: 103 N*m (1,050 kgf*cm, 76 ft.*lbf)

7. **INSPECT FOR EXHAUST GAS LEAK**
8. **INSPECT AND ADJUST REAR WHEEL ALIGNMENT**
   HINT:
   (See page SP-4)
9. **INSPECT ABS SPEED SENSOR SIGNAL**
   HINT:
   (See page BC-3)