REMOVAL

HINT:
Replace the RH side using the same procedures as for the LH side.

1. **REMOVE FRONT WHEEL**
2. **REMOVE FRONT AXLE HUB LH NUT (See page DS-5)**
3. **SEPARATE SPEED SENSOR FRONT LH (See page DS-5)**
4. **SEPARATE FRONT DISC BRAKE CALIPER ASSEMBLY LH**
   (a) Remove the 2 bolts and separate the front disc brake caliper assembly LH from the steering knuckle LH.
   NOTICE:
   Use a string or other device to keep the brake caliper from hanging down.

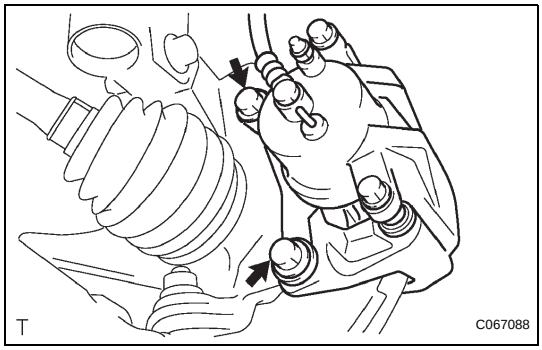

5. **REMOVE FRONT DISC**
6. **SEPARATE TIE ROD END SUB-ASSEMBLY LH (See page DS-6)**
7. **SEPARATE FRONT SUSPENSION ARM SUB-ASSEMBLY LOWER NO.1 LH (See page DS-6)**
8. **REMOVE FRONT AXLE ASSEMBLY LH**
   (a) Using a plastic hammer, separate the front drive shaft assembly LH from the front axle hub sub-assembly LH.
   NOTICE:
   Be careful not to damage the boot and ABS speed sensor rotor.

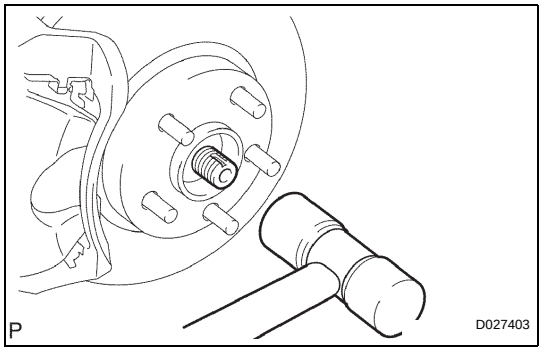

   (b) Remove the 2 bolts, nuts and steering knuckle LH with the front axle nub sub-assembly LH.

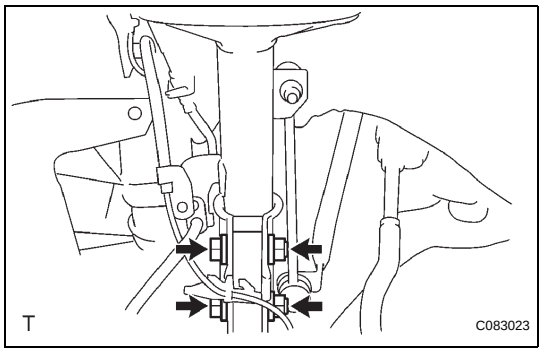

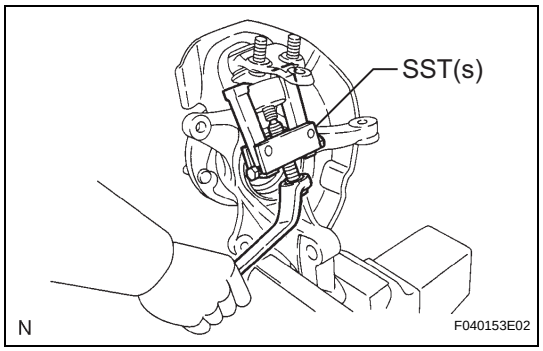

DISASSEMBLY

1. REMOVE LOWER BALL JOINT ASSEMBLY FRONT LH

(a) Remove the cotter pin and nut.

(b) Using SST(s), remove the lower ball joint assembly front LH.

SST 09628-62011

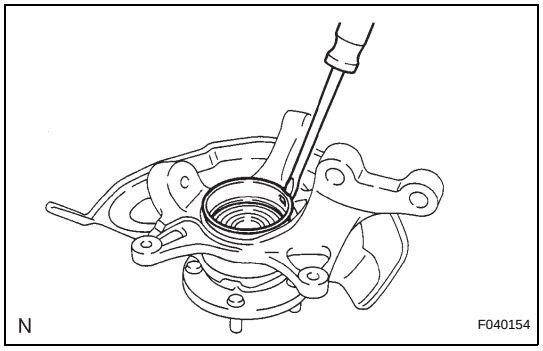

2. REMOVE FRONT WHEEL BEARING DUST DEFLECTOR NO.1 LH

(a) Using a screwdriver, remove the bearing dust deflector NO. 1 LH.

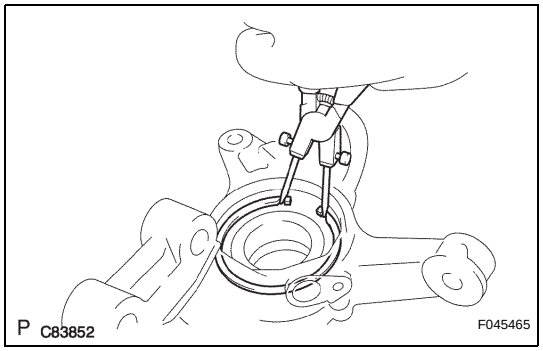

3. REMOVE FRONT AXLE HUB LH HOLE SNAP RING

(a) Using snap ring pliers, remove the front axle hub LH hole snap ring.

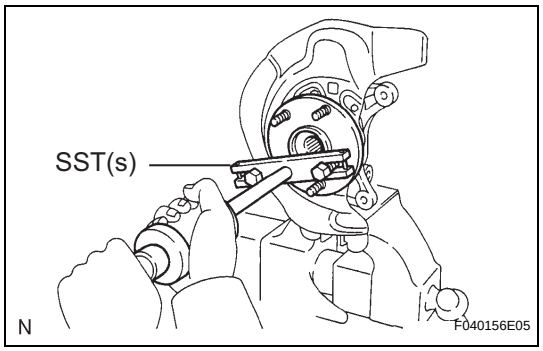

4. REMOVE FRONT AXLE ASSEMBLY LH

(a) Using SST(s), remove the front axle hub sub-assembly LH.

SST 09520-00031

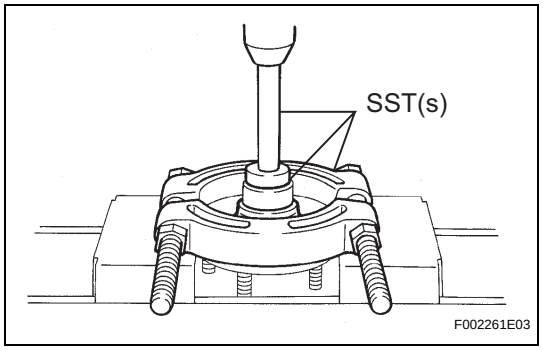

(b) Using SST(s) and a press, remove the bearing inner race (outside) from the front axle hub sub-assembly LH.

SST 09950-00020, 09950-60010 (09951-00430), 09950-70010 (09951-07100)

5. REMOVE DISC BRAKE DUST COVER FRONT LH

(a) Using a torx wrench (T30), remove the 4 bolts and disc brake dust cover front LH.

HINT:

Torx is a registered trademark of Textron Inc.

AH

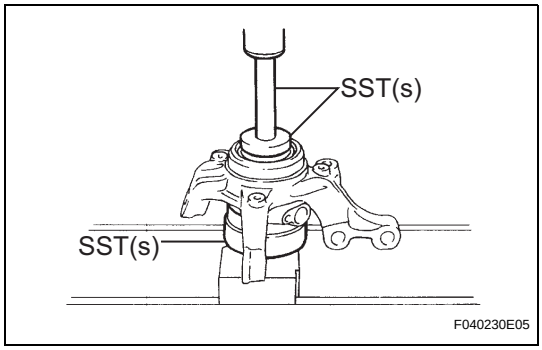

6. REMOVE FRONT AXLE HUB LH BEARING

(a) Place the bearing inner race (outside) on the front axle hub LH bearing.

(b) Using SST(s) and a press, press the front axle hub LH bearing until it contacts the SST(s).

SST 09527-17011, 09950-60010 (09951-00600), 09950-70010 (09951-07100)

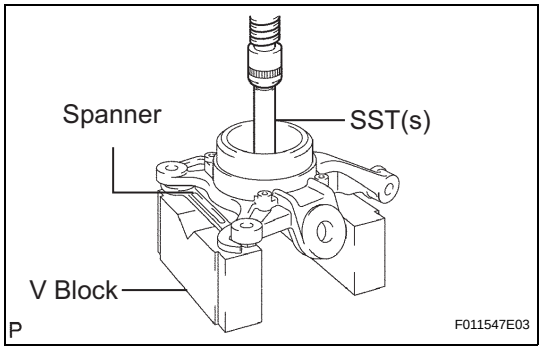

(c) Using a spanner to make the steering knuckle LH horizontal, fix it to the V block, as shown in the illustration.

NOTICE:

Be sure the steering knuckle is horizontally positioned.

(d) Using SST(s) and a press, remove the front axle hub LH bearing.

SST 09950-60010 (09951-00600), 09950-70010 (09951-07100)

REASSEMBLY

1. INSTALL FRONT AXLE HUB LH BEARING

(a) Using SST(s) and a press, install a new front axle hub LH bearing to the steering knuckle LH.

SST 09950-60020 (09951-00810), 09950-70010 (09951-07100)

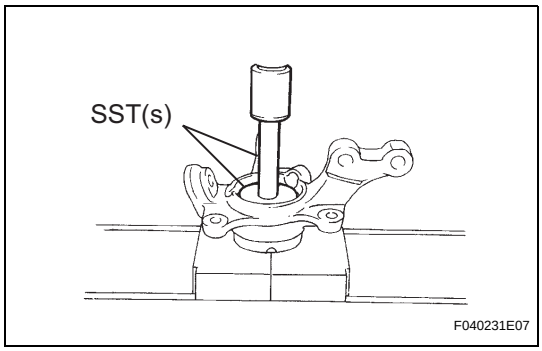

2. INSTALL DISC BRAKE DUST COVER FRONT LH

(a) Place the disc brake dust cover front LH and using a torx wrench (T30), torque the 4 bolts.

Torque: 8.3 N*m (85 kgf*cm, 74 in.*lbf)

HINT:

Torx is a registered trademark of Textron Inc.

3. INSTALL FRONT AXLE HUB SUB-ASSEMBLY LH

(a) Using SST(s), and a press, install the front axle hub sub-assembly LH.

SST 09608-32010, 09950-60020 (09951-00810), 09950-70010 (09951-07100)

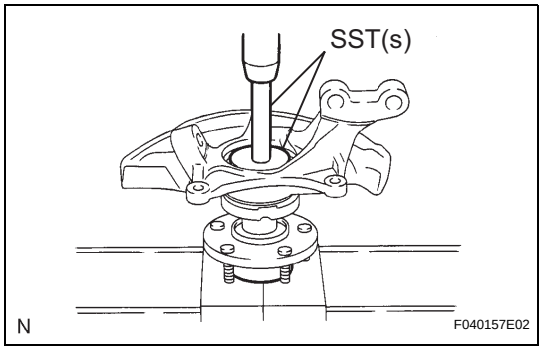

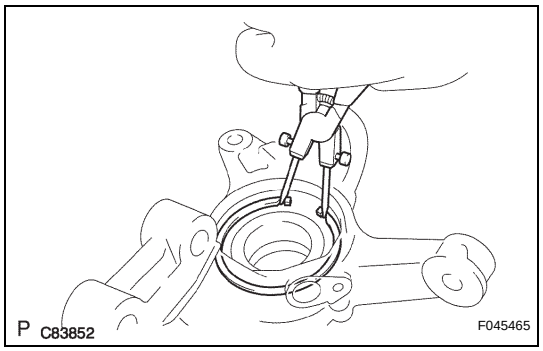

4. **INSTALL FRONT AXLE HUB LH HOLE SNAP RING**
   (a) Using snap ring pliers, install a new front axle hub LH hole snap ring.

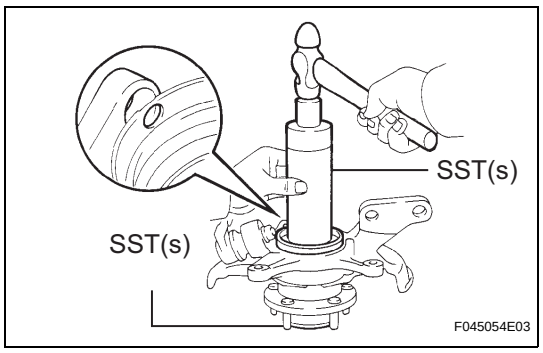

5. **INSTALL FRONT WHEEL BEARING DUST DEFLECTOR NO.1 LH**
   (a) Using SST(s) and a hammer, install the bearing dust deflector No. 1 LH.
   SST 09316-60011 (09316-00011, 09316-00031), 09608-32010
   HINT:
   Align the hole for the speed sensor in the bearing dust deflector No. 1 LH with the steering knuckle.

6. **INSTALL LOWER BALL JOINT ASSEMBLY FRONT LH**
   (a) Install the lower ball joint assembly front LH and tighten the nut.
   Torque: 123 N*m (1,250 kgf*cm, 91 ft.*lbf)
   (b) Install a new cotter pin.
   NOTICE:
   If the holes for the cotter pin are not aligned, tighten the nut up to 60° further.

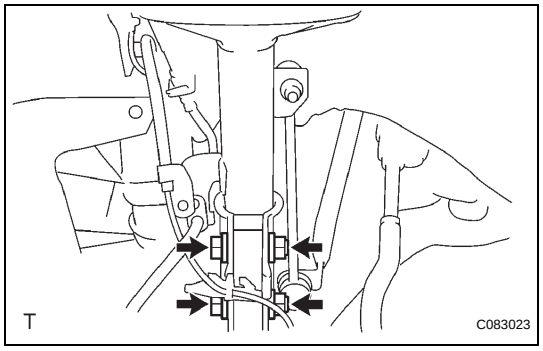

INSTALLATION

1. **INSTALL FRONT AXLE ASSEMBLY LH**
   (a) Install the 2 bolts, nuts and front axle assembly LH with the 2 bolts and nuts to the shock absorber assembly front LH.
   Torque: 230 N*m (2,350 kgf*cm, 170 ft.*lbf)
   NOTICE:
   - **Only when reusing the bolts and nuts, apply the small amount of engine oil to the screw part of the nuts.**
   - **Do not excessively push out the front axle assembly LH.**
   - **Be careful not to damage the outboard joint boot.**
   - **Be careful not to damage the speed sensor rotor.**

2. **INSTALL FRONT SUSPENSION ARM SUB-ASSEMBLY LOWER NO.1 LH (See page DS-18)**

3. **INSTALL TIE ROD END SUB-ASSEMBLY LH (See page DS-18)**

4. **INSTALL FRONT DISC**

AH

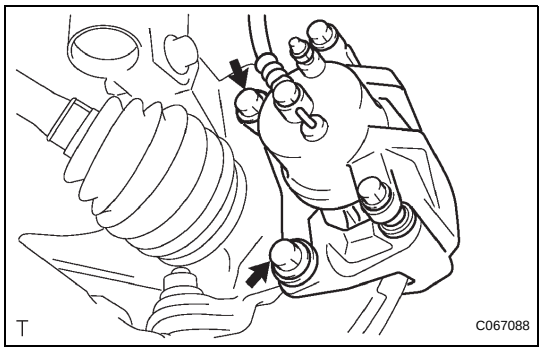

5. **INSTALL FRONT DISC BRAKE CALIPER ASSEMBLY LH**
   (a) Install the front disc brake caliper assembly LH with the 2 bolts to the steering knuckle LH.
   Torque: 104 N*m (1,060 kgf*cm, 77 ft.*lbf)
6. **INSTALL FRONT AXLE HUB LH NUT**
   (a) Using a socket wrench (30mm), install a new axle hub LH nut.
   Torque: 294 N*m (3,000 kgf*cm, 217 ft.*lbf)
7. **SEPARATE FRONT DISC BRAKE CALIPER ASSEMBLY LH**
   (a) Remove the 2 bolts and separate the front disc brake caliper assembly LH from the steering knuckle LH.
   NOTICE:
   Use a string or other device to keep the brake caliper from hanging down.
8. **REMOVE FRONT DISC**
9. **INSPECT BEARING BACKLASH (See page AH-5)**
10. **INSPECT AXLE HUB DEVIATION (See page AH-5)**
11. **INSTALL FRONT DISC**

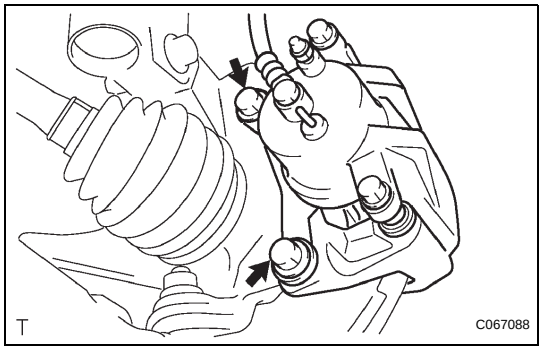

12. **INSTALL FRONT DISC BRAKE CALIPER ASSEMBLY LH**
    (a) Install the front disc brake caliper assembly LH with the 2 bolts to the steering knuckle LH.
    Torque: 104 N*m (1,060 kgf*cm, 77 ft.*lbf)
13. **INSTALL SPEED SENSOR FRONT LH (See page DS-18)**

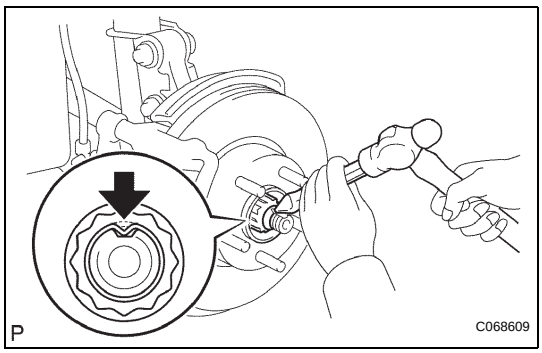

14. **INSTALL FRONT AXLE HUB LH NUT**
    (a) Using a socket wrench (30 mm), install a new axle hub LH nut.
    Torque: 294 N*m (3,000 kgf*cm, 217 ft.*lbf)
    (b) Using a chisel and hammer, stake the axle hub LH nut.
15. **INSTALL FRONT WHEEL**
    Torque: 103 N*m (1,050 kgf*cm, 76 ft.*lbf)
16. **INSPECT FRONT WHEEL ALIGNMENT**
    (a) Inspect front wheel alignment (See page SP-4).
17. **CHECK ABS SPEED SENSOR SIGNAL**
    (a) ABS WITH EBD SYSTEM (See page BC-3).
    (b) ABS WITH EBD & BA & TRAC & VSC SYSTEM (See page BC-72).