REMOVAL

HINT:
Replace the RH side by the same procedures as the LH side.

1. **REMOVE REAR WHEEL**
2. **REMOVE REAR AXLE SHAFT LH NUT (See page DS-22)**
3. **SEPARATE REAR DISC BRAKE CALIPER ASSEMBLY LH**
   (a) Removing the 2 bolts, separate the rear disc brake caliper assembly LH.
4. **REMOVE REAR DISC**
5. **SEPARATE SPEED SENSOR REAR LH**
   (a) Removing the bolt, separate the speed sensor rear LH.
   NOTICE:
   - **Be careful not to damage the speed sensor.**
   - **Prevent foreign matter from attaching to the speed sensor.**
6. **REMOVE REAR DRIVE SHAFT ASSEMBLY LH (See page DS-22)**
7. **REMOVE REAR AXLE HUB & BEARING ASSEMBLY LH**
   (a) Remove the 4 bolts and hub & bearing assembly LH.

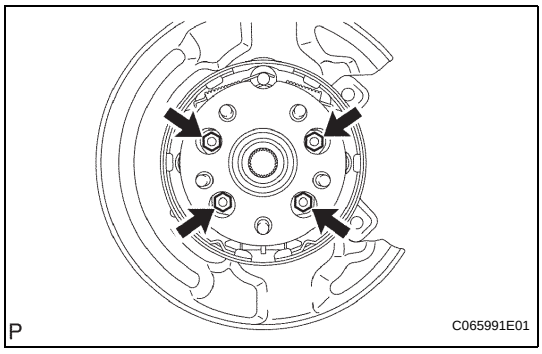

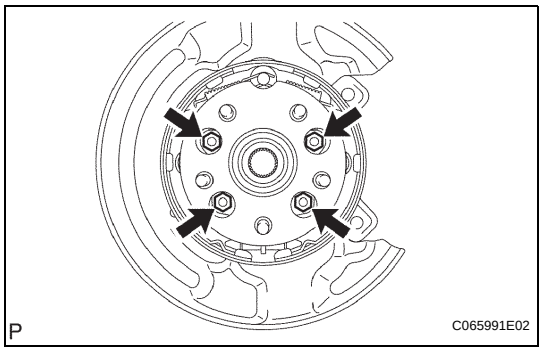

INSTALLATION

1. **INSTALL REAR AXLE HUB & BEARING ASSEMBLY LH**
   (a) Install the hub & bearing assembly LH with the 4 bolts.
   Torque: 56 N*m (571 kgf*cm, 41 ft.*lbf)
2. **INSPECT BEARING BACKLASH (See page AH-19)**
3. **INSPECT AXLE HUB DEVIATION (See page AH-19)**
4. **INSTALL REAR DRIVE SHAFT ASSEMBLY LH (See page DS-26)**
5. **INSTALL SPEED SENSOR REAR LH**
   (a) Install the bolt, connect the speed sensor rear LH.
   Torque: 8.0 N*m (82 kgf*cm, 71 in.*lbf)
   NOTICE:
   - **Be careful not to damage the speed sensor.**
   - **Prevent foreign matter from attaching to the speed sensor.**

- **Do not twist the sensor wire when installing the sensor.**

6. **INSTALL REAR DISC**

7. **INSTALL REAR DISC BRAKE CALIPER ASSEMBLY LH**
   (a) Install the rear disc brake caliper assembly LH with the 2 bolts.
   Torque: 88 N*m (900 kgf*cm, 65 ft.*lbf)

8. **INSTALL REAR AXLE SHAFT LH NUT (See page DS-26)**

9. **INSTALL REAR WHEEL**
   Torque: 103 N*m (1,050 kgf*cm, 76 ft.*lbf)

10. **CHECK ABS SPEED SENSOR SIGNAL**
    (a) ABS WITH EBD & BA & TRAC & VSC SYSTEM (See page BC-72).