REAR WHEEL ALIGNMENT

ADJUSTMENT

NOTICE:
For vehicles equipped with VSC, if wheel alignment has been adjusted, and if suspension or underbody components have been removed/installed or replaced, be sure to perform the following initialization procedure in order for the system to function normally:

1. **Disconnect the negative battery terminal for more than 2 seconds.**
2. **Reconnect the negative battery terminal.**
3. **Perform zero point calibration of the yaw rate and acceleration sensor and test mode inspection.**

HINT:
(See page BC-70)

1. INSPECT TIRE

HINT:
(See page TW-2)

2. MEASURE VEHICLE HEIGHT

NOTICE:
Before inspecting the wheel alignment, adjust the vehicle height to the specified valve.

3. INSPECT TOE-IN

(a) Inspect the toe-in.

Toe-in
FF

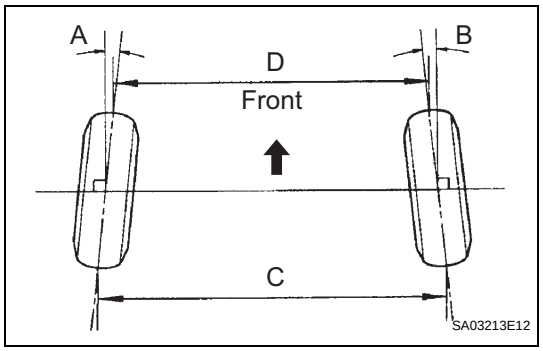

Tire size	Toe-in (total)
215/65R 16	A + B: 16.2' +/- 16.2' (0.27° +/- 0.27°) C - D: 3.2 +/- 3.2 mm (0.13 +/- 0.13 in.)
225/60R 17	A + B: 16.2' +/- 16.2' (0.27° +/- 0.27°) C - D: 3.3 +/- 3.3 mm (0.13 +/- 0.13 in.)

4WD

Tire size	Toe-in (total)
225/60R 17	A + B: 12.6' +/- 16.2' (0.21° +/- 0.27°) C - D: 2.6 +/- 3.3 mm (0.10 +/- 0.13 in.)

HINT:
If the toe-in is not within the specified value, inspect the suspension parts and replace them if necessary.

4. INSPECT CAMBER

(a) Install the camber-caster-kingpin gauge or position the vehicle on the wheel alignment tester.

(b) Inspect the camber.

Camber
FF

Camber Right-left error
-1°22' +/- 30' (-1.37° +/- 0.5°) 30' (0.5°) or less

SP

4WD

Camber Right-left error
-1°25' +/- 30' (-1.42° +/- 0.5°) **30' (0.5°) or less**

HINT:
If the measured value is not within the specified value, inspect the suspension parts for damage and the wear and replace them if necessary because camber is not adjustable.