INSTALLATION

1. INSTALL FRONT SUSPENSION ARM SUB-ASSEMBLY LOWER NO.1 LH

(a) Install the front lower arm bush stopper to the front suspension arm sub-assembly lower No.1 LH.

(b) Install the bolt and nut to the rear side of the front suspension arm sub-assembly lower No.1 LH.
Torque: 206 N*m (2,100 kgf*cm, 152 ft.*lbf)

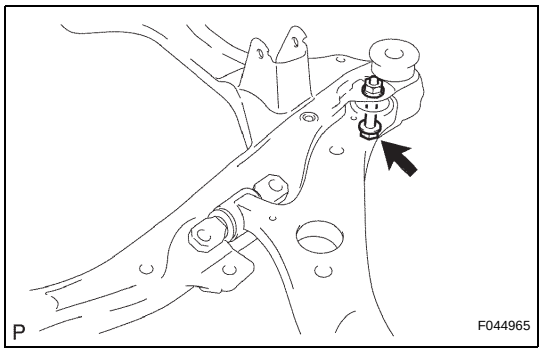

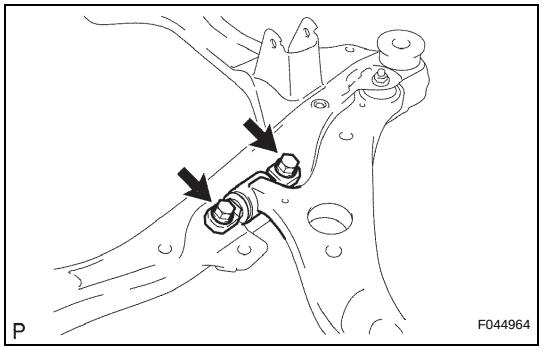

(c) Install the 2 bolts on the front side of the front suspension arm sub-assembly lower No.1 LH.
Torque: 200 N*m (2,040 kgf*cm, 148 ft.*lbf)

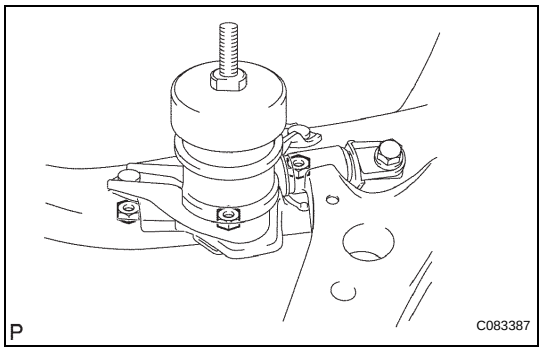

2. INSTALL TRANSVERSE ENGINE ENGINE MOUNTING INSULATOR

(a) Install the transverse engine engine mounting insulator with the 3 nuts.
Torque: 87 N*m (887 kgf*cm, 64 ft.*lbf)

3. INSTALL ENGINE ASSEMBLY WITH TRANSAXLE

HINT:
(See page EM-52)

SP