REMOVAL

1. **REMOVE FRONT WHEEL**
2. **REMOVE FRONT WIPER ARM HEAD CAP**
   HINT:
   (See page WW-3)
3. **REMOVE FR WIPER ARM RH**
   HINT:
   (See page WW-3)
4. **REMOVE FR WIPER ARM LH**
   HINT:
   (See page WW-3)
5. **REMOVE COWL TOP VENTILATOR LOUVER SUB-ASSEMBLY**
   HINT:
   (See page WW-3)
6. **REMOVE WINDSHIELD WIPER MOTOR & LINK ASSEMBLY**
   HINT:
   (See page WW-3)
7. **REMOVE COWL TOP PANEL SUB-ASSEMBLY OUTER FRONT**
   HINT:
   When removing or installing the front shock absorber with coil spring RH, it is necessary to remove the cowl top panel sub-assembly outer front.
   (a) Disconnect the wire harness from the cowl top panel sub-assembly outer front.
   (b) Remove the 9 bolts, cowl top brace and cowl top panel sub-assembly outer front.

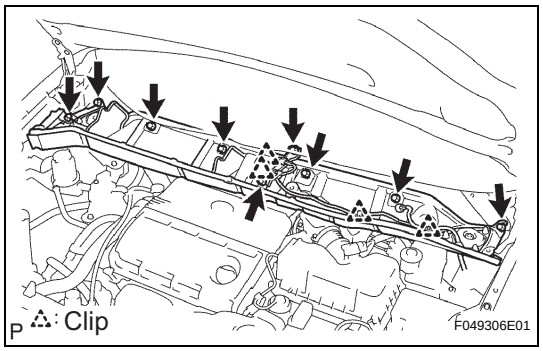

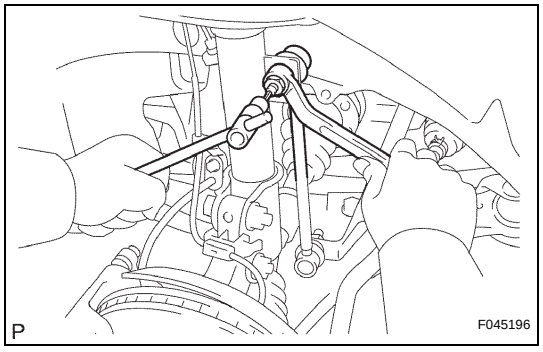

8. **REMOVE FRONT STABILIZER LINK ASSEMBLY LH**
   (a) Remove the nut and disconnect the front stabilizer link assembly LH from the shock absorber assembly front LH.
   HINT:
   If the ball joint turns together with the nut, use a hexagon (6 mm) wrench to hold the stud.

SP

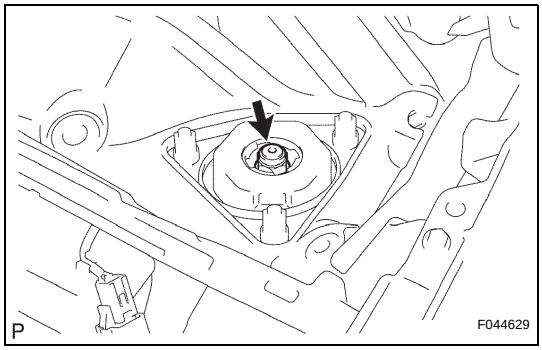

9. REMOVE FRONT SHOCK ABSORBER WITH COIL SPRING

(a) Loosen the lock nut.
NOTICE:
- **Do not loosen the nut except for the purpose of disassembling the shock absorber assembly front LH with coil spring.**
- **Do not remove the lock nut.**

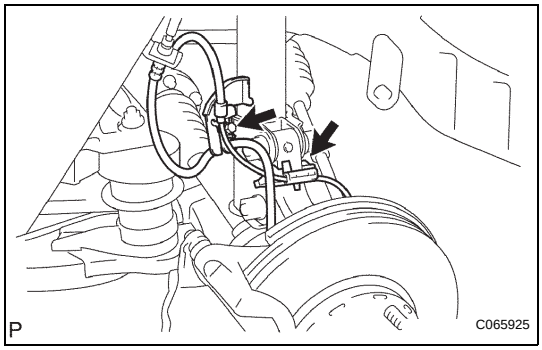

(b) Remove the bolt, and disconnect the front flexible hose No.1 and speed sensor front LH.

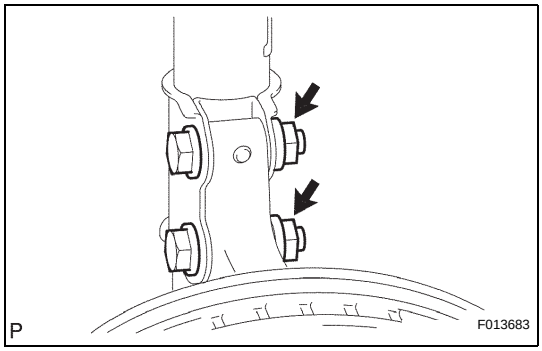

(c) Remove the 2 nuts and 2 bolts on the lower side of the front shock absorber with coil spring.
NOTICE:
When removing the bolt, hold the nut not to rotate.

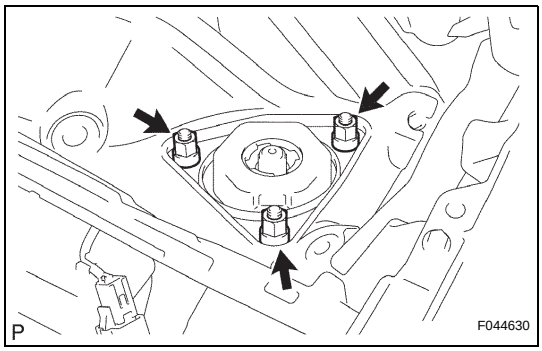

(d) Remove the 3 nuts on the upper side of the front shock absorber with coil spring.
(e) Remove the front shock absorber with the coil spring.