DISASSEMBLY

1. FIX FRONT SHOCK ABSORBER WITH COIL SPRING

(a) Install 2 nuts and a bolt to the bracket at the lower side of the front shock absorber with coil spring and secure it in a vise.

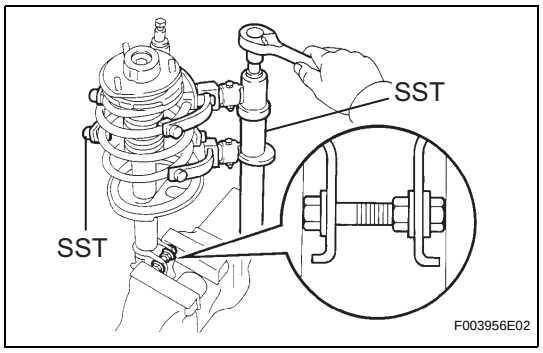

2. REMOVE FRONT SUSPENSION SUPPORT SUB-ASSEMBLY LH

(a) Using SST, compress the front coil spring LH.

SST 09727-30021 (09727-00010, 09727-00021, 09727-00031)

NOTICE:

Do not use an impact wrench. It will damage the SST.

HINT:

Use 2 SST of the same type.

(b) Remove the lock nut and the front suspension support sub-assembly.

3. REMOVE FRONT SUSPENSION SUPPORT LH BEARING

4. REMOVE FRONT COIL SPRING SEAT UPPER LH

5. REMOVE FRONT COIL SPRING INSULATOR UPPER LH

6. REMOVE FRONT COIL SPRING LH

7. REMOVE FRONT SPRING BUMPER LH

8. REMOVE FRONT COIL SPRING INSULATOR LOWER LH

9. REMOVE SHOCK ABSORBER ASSEMBLY FRONT LH

INSPECTION

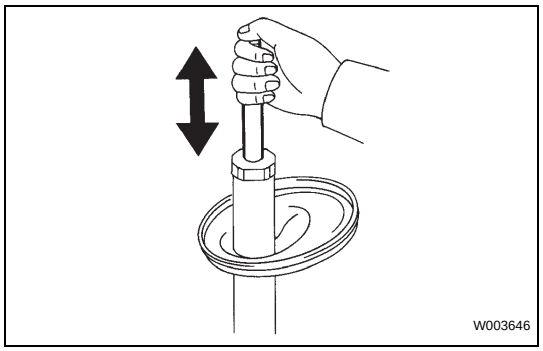

1. INSPECT SHOCK ABSORBER ASSEMBLY FRONT LH

(a) Compress and extend the shock absorber rod and check that there is no unusual resistance or unusual sound during operation.

If there is any abnormality, replace the shock absorber assembly front LH with a new one.

NOTICE:

When disposing of the shock absorber assembly front LH, see DISPOSAL (See page SP-18).

REASSEMBLY

1. INSTALL SHOCK ABSORBER ASSEMBLY FRONT LH

2. INSTALL FRONT COIL SPRING INSULATOR LOWER LH

(a) Install the front coil spring insulator lower LH onto the shock absorber assembly front LH.

3. INSTALL FRONT SPRING BUMPER LH

(a) Install the front spring bumper LH to the piston rod.

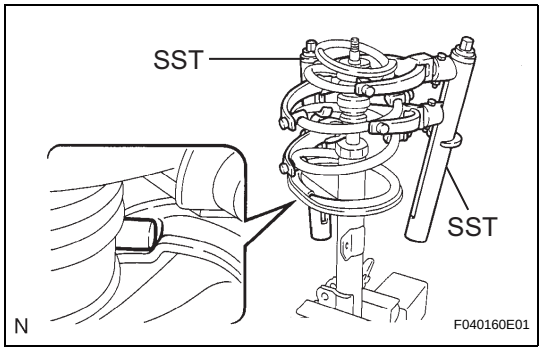

4. INSTALL FRONT COIL SPRING LH

(a) Using SST, compress the front coil spring LH.

SST 09727-30021 (09727-00010, 09727-00021, 09727-00031)

NOTICE:

Do not use an impact wrench. It will damage the SST.

HINT:

Use 2 SST of the same type.

(b) Install the front coil spring LH to the shock absorber assembly front LH.

HINT:

Fit the front coil spring insulator lower LH into the gap of the shock absorber assembly front LH.

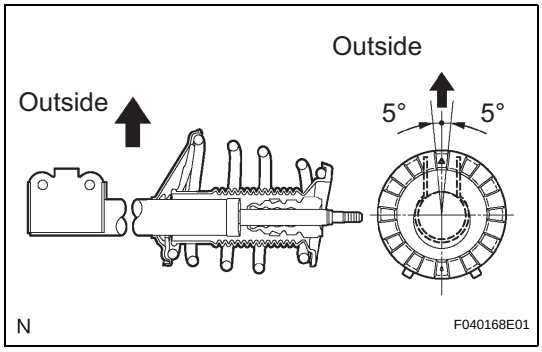

5. INSTALL FRONT COIL SPRING INSULATOR UPPER LH

(a) Install the front coil spring insulator upper LH as shown in the illustration.

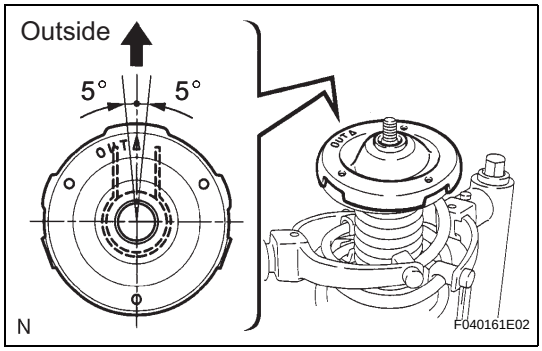

6. INSTALL FRONT COIL SPRING SEAT UPPER LH

(a) Install the front coil spring seat upper LH to the shock absorber assembly front LH with the mark facing to the outside of the vehicle.

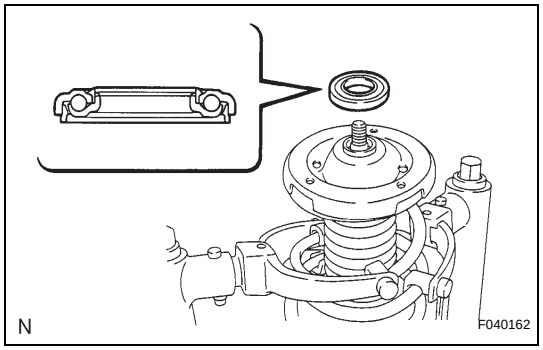

7. INSTALL FRONT SUSPENSION SUPPORT LH BEARING

(a) Install the front suspension support LH bearing.

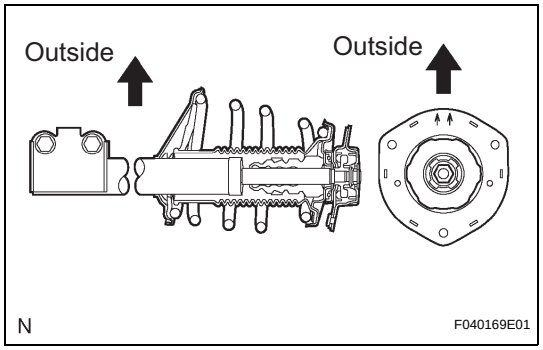

8. INSTALL FRONT SUSPENSION SUPPORT SUB-ASSEMBLY LH

(a) Install the front suspension support sub-assembly LH with the mark facing to the outside of the vehicle.

(b) Temporarily tighten a new lock nut.