INSTALLATION

1. INSTALL FRONT SHOCK ABSORBER WITH COIL SPRING

(a) Install the front shock absorber with coil spring as shown in the illustration.

(b) Install the 3 nuts to the upper side of the front shock absorber with coil spring.
Torque: 80 N*m (816 kgf*cm, 59 ft.*lbf)

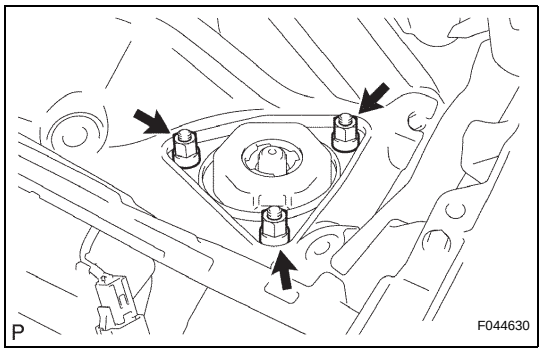

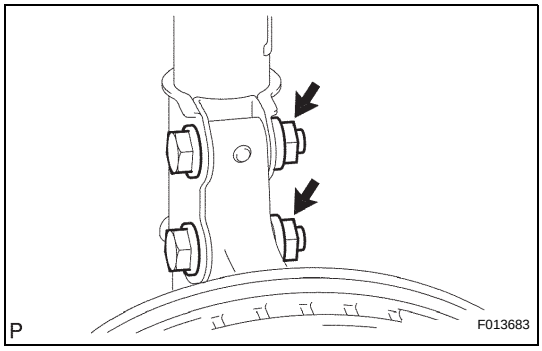

(c) Install the 2 bolts and 2 nuts to the lower side of the front shock absorber with coil spring.
Torque: 210 N*m (2,140 kgf*cm, 155 ft.*lbf)
NOTICE:
When installing the bolt, hold the nut not to rotate.

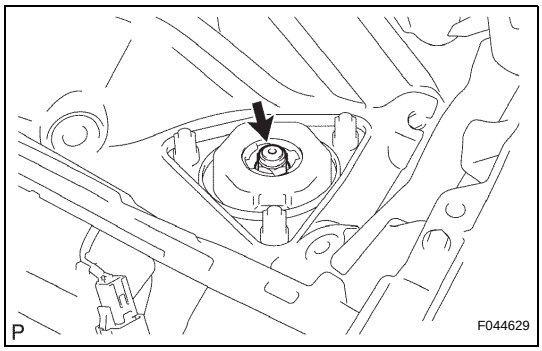

(d) Fully tighten the lock nut.
Torque: 49 N*m (500 kgf*cm, 36 ft.*lbf)

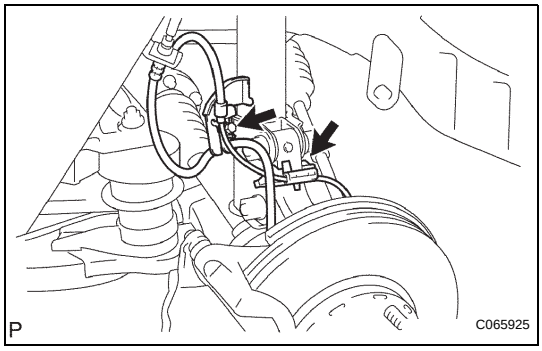

(e) Install the front flexible hose No.1 and speed sensor front LH with the bolt.
Torque: 19 N*m (189 kgf*cm, 14 ft.*lbf)

SP

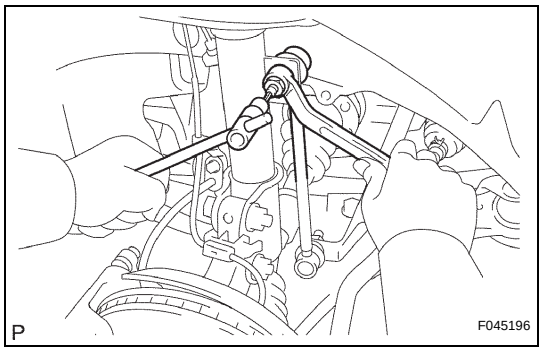

2. INSTALL FRONT STABILIZER LINK ASSEMBLY LH

(a) Install the front stabilizer link assembly LH with the nut.
Torque: 74 N*m (755 kgf*cm, 55 ft.*lbf)
HINT:
If the ball joint turns together with the nut, use a hexagon (6 mm) wrench to hold the stud.

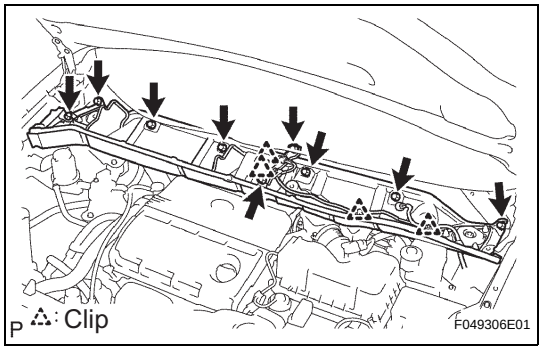

3. INSTALL COWL TOP PANEL SUB-ASSEMBLY OUTER FRONT

(a) Install the cowl top brace and cowl top panel sub-assembly outer front with the 9 bolts.
Torque: 7.5 N*m (76 kgf*cm, 66 in.*lbf)

(b) Connect the wire harness to the cowl top panel sub-assembly outer front.

4. INSTALL WINDSHIELD WIPER MOTOR & LINK ASSEMBLY

HINT:
(See page WW-3)

5. INSTALL FR WIPER ARM LH

HINT:
(See page WW-3)

6. INSTALL FR WIPER ARM RH

HINT:
(See page WW-3)

7. INSTALL FRONT WHEEL
Torque: 103 N*m (1,050 kgf*cm, 76 ft.*lbf)

8. INSPECT AND ADJUST FRONT WHEEL ALIGNMENT

HINT:
(See page SP-4)

DISPOSAL

1. DISPOSE OF SHOCK ABSORBER ASSEMBLY FRONT LH

HINT:

Dispose the RH side by the same procedures as the LH side.

(a) Fully extend the shock absorber rod.

(b) Using a drill, make a hole in the cylinder as shown in the illustration to discharge the gas inside.

CAUTION:

- **When drilling, chips may fly out, work carefully.**
- **The gas is colorless, odorless and non-poisonous.**

