REMOVAL

1. **REMOVE FRONT WHEEL**
2. **REMOVE FRONT AXLE HUB LH NUT**
   HINT:
   (See page AH-4)
   SST 09930-00010
3. **SEPARATE SPEED SENSOR FRONT LH**
   HINT:
   (See page AH-4)
4. **SEPARATE FRONT DISC BRAKE CALIPER ASSEMBLY LH**
   HINT:
   (See page AH-4)
5. **REMOVE FRONT DISC**
6. **SEPARATE TIE ROD ASSEMBLY LH**
   HINT:
   (See page AH-4)
   SST 09628-62011
7. **SEPARATE FRONT SUSPENSION ARM SUB-ASSEMBLY LOWER NO.1 LH**
   HINT:
   (See page AH-4)
8. **REMOVE FRONT AXLE ASSEMBLY LH**
   HINT:
   (See page AH-4)
9. **REMOVE LOWER BALL JOINT ASSEMBLY FRONT LH**
   (a) Remove the cotter pin and nut.
   (b) Using SST, remove the lower ball joint assembly front LH.
   SST 09628-62011

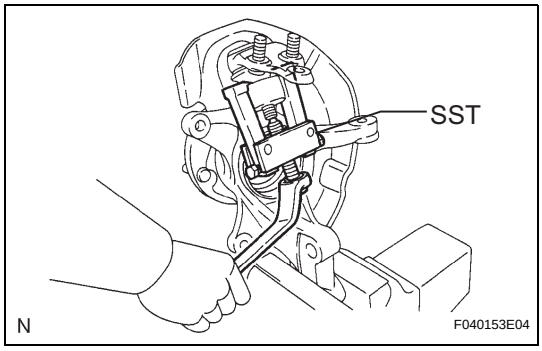

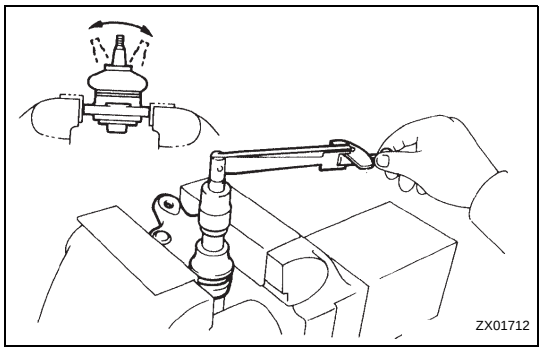

SP

INSPECTION

1. **INSPECT LOWER BALL JOINT ASSEMBLY FRONT LH**
   (a) As shown in the illustration, flip the ball joint stud back and forth 5 times, before installing the nut.
   (b) Using a torque wrench, turn the nut continuously at a rate of 3 - 5 seconds per 1 turn and take the torque reading on the 5th turn.
   Turning torque:
   0.98 to 3.43 N*m (10 to 35 kgf*cm, 8.7 to 30 in.*lbf)

INSTALLATION

1. **INSTALL LOWER BALL JOINT ASSEMBLY FRONT LH**
   (a) Install the lower ball joint assembly front LH and tighten the nut.
   Torque: 123 N*m (1,250 kgf*cm, 91 ft.*lbf)
   (b) Install a new cotter pin.
   NOTICE:
   If the holes for the cotter pin are not aligned, tighten the nut further up to 60°.
2. **INSTALL FRONT AXLE ASSEMBLY LH**
   HINT:
   (See page AH-4)
3. **INSTALL FRONT SUSPENSION ARM SUB-ASSEMBLY LOWER NO.1 LH**
   HINT:
   (See page AH-4)
4. **INSTALL TIE ROD ASSEMBLY LH**
   HINT:
   (See page AH-4)
5. **INSTALL FRONT DISC**
6. **INSTALL FRONT DISC BRAKE CALIPER ASSEMBLY LH**
   HINT:
   (See page AH-4)
7. **INSTALL SPEED SENSOR FRONT LH**
   HINT:
   (See page AH-4)
8. **INSTALL FRONT AXLE HUB LH NUT**
   HINT:
   (See page AH-4)
9. **INSTALL FRONT WHEEL**
   Torque: 103 N*m (1,050 kgf*cm, 76 ft.*lbf)
10. **INSPECT AND ADJUST FRONT WHEEL ALIGNMENT**
    HINT:
    (See page SP-4)
11. **CHECK ABS SPEED SENSOR SIGNAL**
    w/o VSC: (See page BC-2).
    w/ VSC: (See page BC-68).