FRONT SHOCK ABSORBER WITH COIL SPRING

COMPONENTS

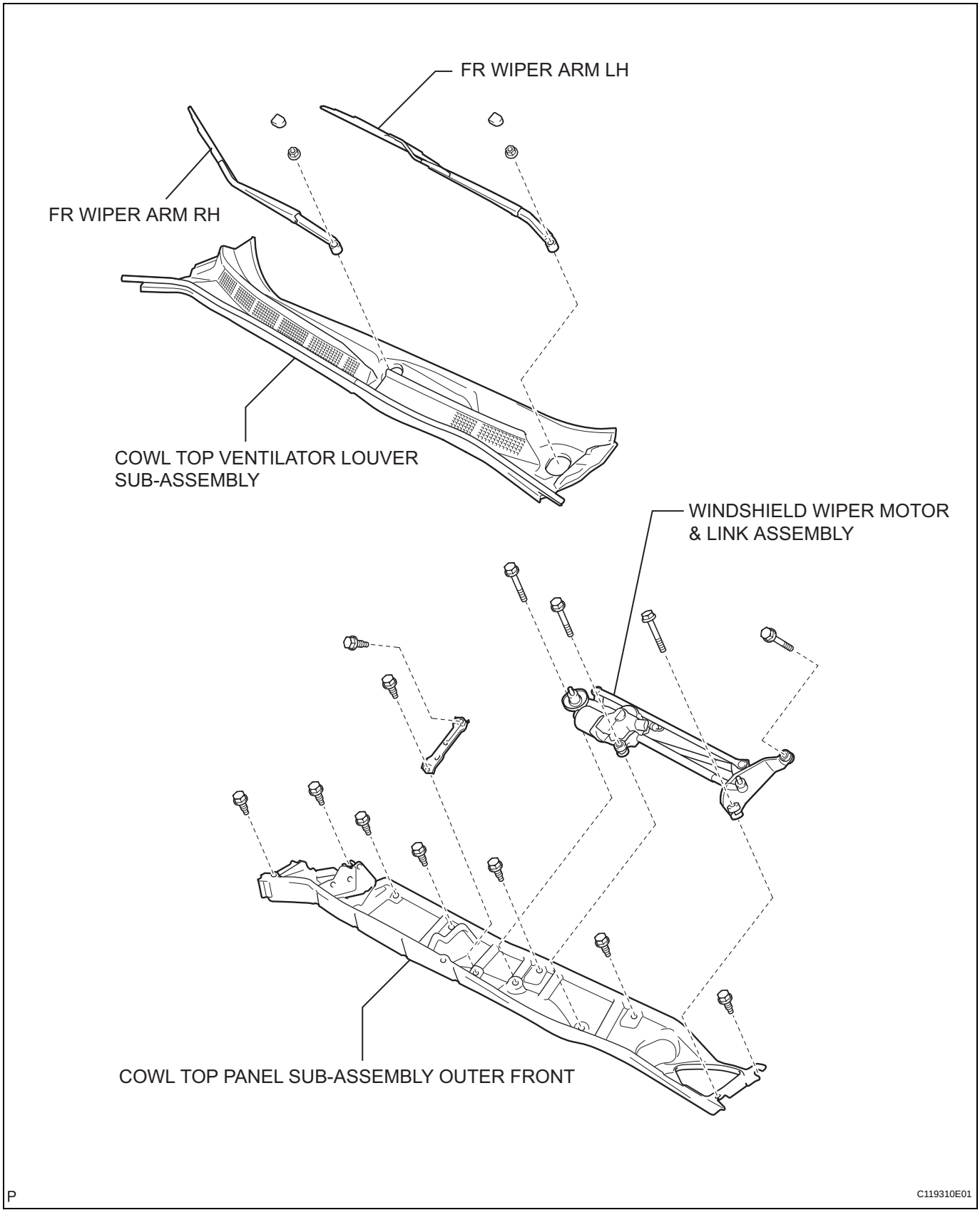

SP

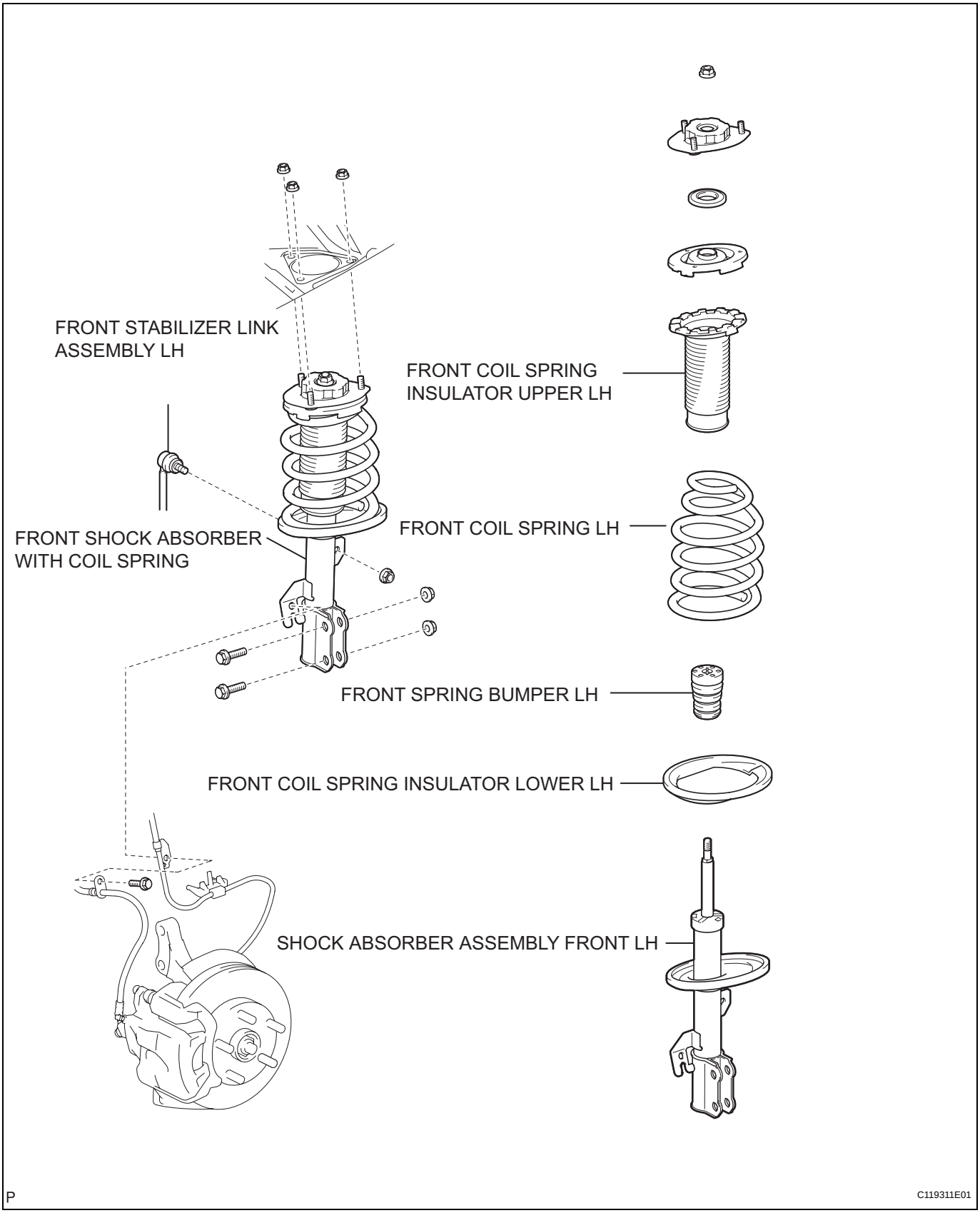
FRONT STABILIZER LINK ASSEMBLY LH
FRONT COIL SPRING INSULATOR UPPER LH
FRONT SHOCK ABSORBER WITH COIL SPRING
FRONT COIL SPRING LH
FRONT SPRING BUMPER LH
FRONT COIL SPRING INSULATOR LOWER LH
SHOCK ABSORBER ASSEMBLY FRONT LH
P
C119311E01

SP