FRONT LOWER SUSPENSION ARM

COMPONENTS

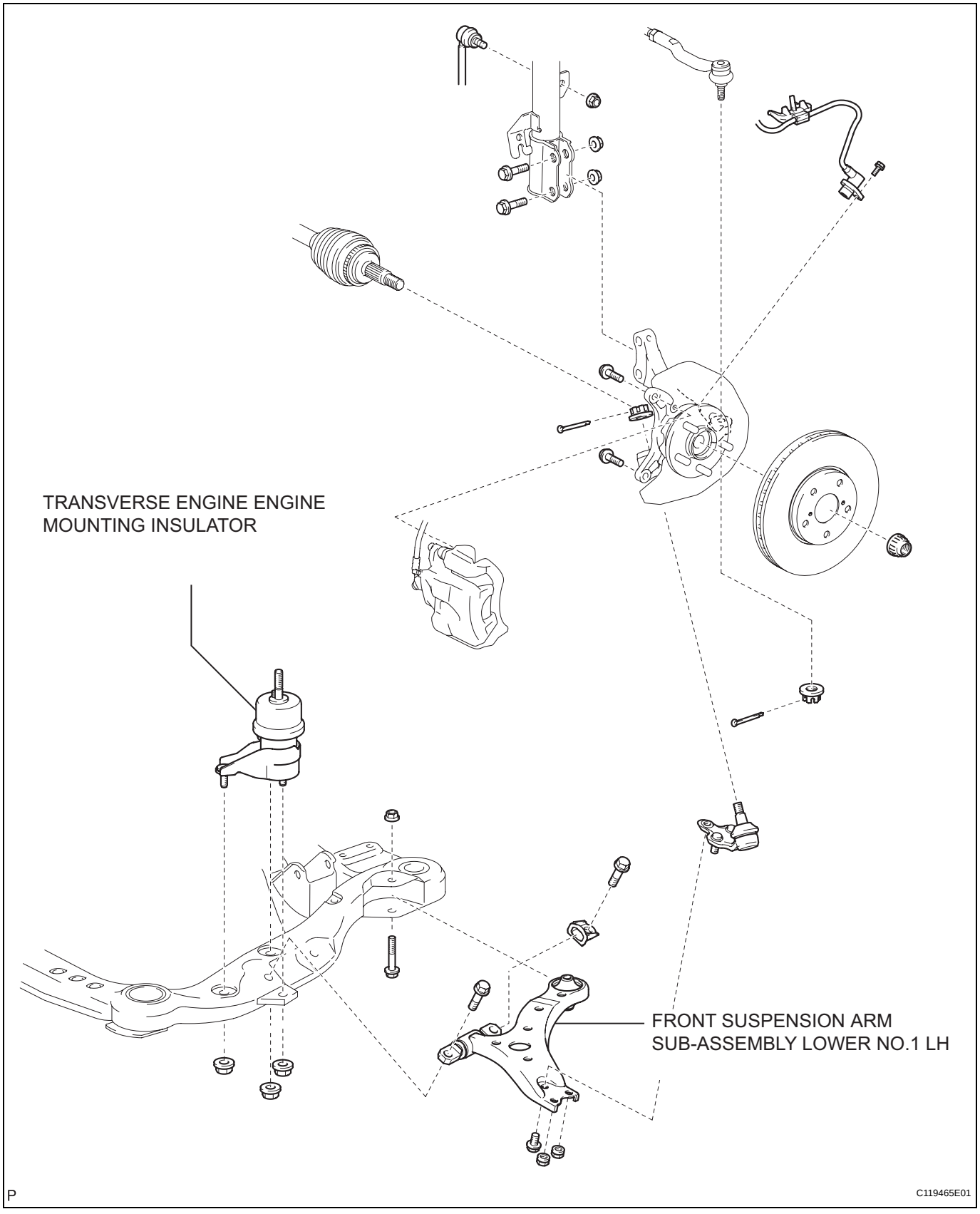

SP

REMOVAL

1. REMOVE ENGINE ASSEMBLY WITH TRANSAXLE

HINT:

(See page EM-34)

2. REMOVE TRANSVERSE ENGINE ENGINE MOUNTING INSULATOR

(a) Remove the 3 nuts and transverse engine engine mounting insulator.

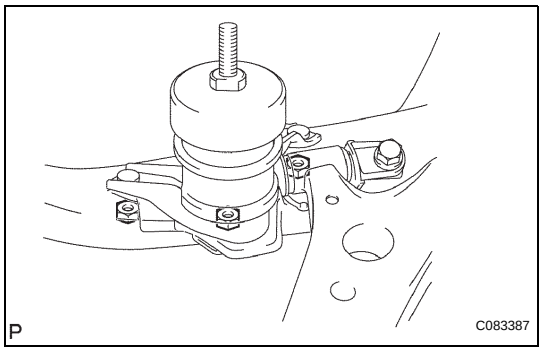

3. REMOVE FRONT SUSPENSION ARM SUB-ASSEMBLY LOWER NO.1 LH

(a) Remove the 2 bolts on the front side of the front suspension arm sub-assembly lower No.1 LH.

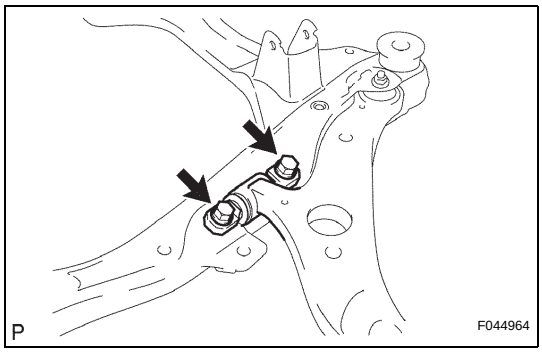

(b) Remove the bolt and nut on the rear side of the front suspension arm sub-assembly lower No.1 LH.

(c) Remove the front suspension arm sub-assembly lower No.1 LH.

(d) Remove the front lower arm bush stopper from the front suspension arm sub-assembly lower No.1 LH.

