INSTALLATION

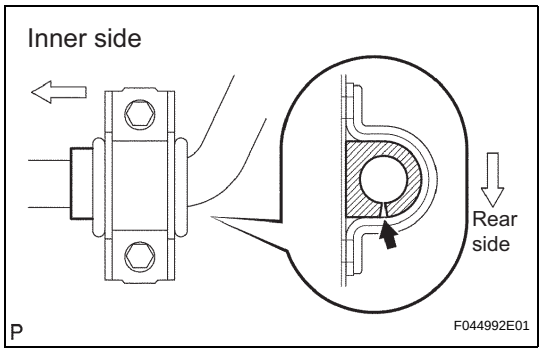

1. **INSTALL STABILIZER BAR FRONT**
2. **INSTALL FRONT STABILIZER BAR BUSH NO.1**
   (a) Install the front stabilizer bar bush No. 1.
   HINT:
   Install the bushing to the outer side of the bushing stopper on the stabilizer bar as shown in the illustration.
3. **INSTALL STEERING INTERMEDIATE SHAFT ASSEMBLY**
   HINT:
   (See page PS-21)
4. **INSTALL RACK & PINION POWER STEERING GEAR ASSEMBLY**
   HINT:
   (See page PS-21)
5. **CONNECT PRESSURE FEED TUBE ASSEMBLY**
   HINT:
   (See page PS-21)
   SST 09023-12701
6. **INSTALL TIE ROD ASSEMBLY LH**
   HINT:
   (See page AH-4)
7. **INSTALL TIE ROD ASSEMBLY RH**
   HINT:
   Install the RH side by the same procedures as the LH side.

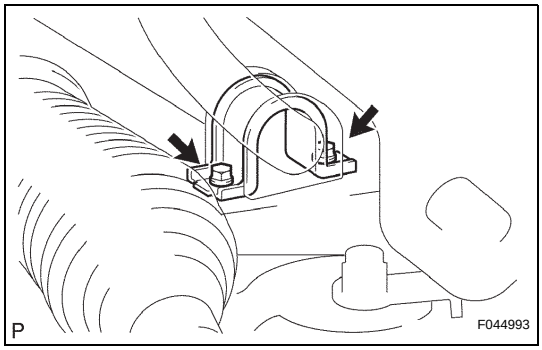

8. **INSTALL FRONT STABILIZER BRACKET NO.1 LH**
   (a) Install the front stabilizer bracket No.1 LH with the 2 bolts.
   Torque: 17 N*m (173 kgf*cm, 12 ft.*lbf)
9. **INSTALL FRONT STABILIZER BRACKET NO.1 RH**
   HINT:
   Install the RH side by the same procedures as the LH side.
10. **INSTALL FRONT STABILIZER LINK ASSEMBLY LH**
    (a) Install the front stabilizer link assembly LH with the 2 nuts.
    Torque: 74 N*m (755 kgf*cm, 55 ft.*lbf)
    HINT:
    If the ball joint turns together with the nut, use a hexagon (6 mm) wrench to hold the stud.
11. **INSTALL FRONT STABILIZER LINK ASSEMBLY RH**
    HINT:
    Install the RH side by the same procedures as the LH side.
12. **INSTALL FRONT WHEELS**
    Torque: 103 N*m (1,050 kgf*cm, 76 ft.*lbf)
13. **INSPECT CENTER FRONT WHEEL**

14. **INSPECT STEERING WHEEL CENTER POINT**
15. **ADD POWER STEERING FLUID**
16. **BLEED POWER STEERING FLUID**
    HINT:
    (See page SP-26)
17. **CHECK POWER STEERING FLUID LEAKAGE**
18. **INSPECT AND ADJUST FRONT WHEEL ALIGNMENT**
    HINT:
    (See page SP-4)