FRONT STABILIZER BAR (for 2WD)

COMPONENTS

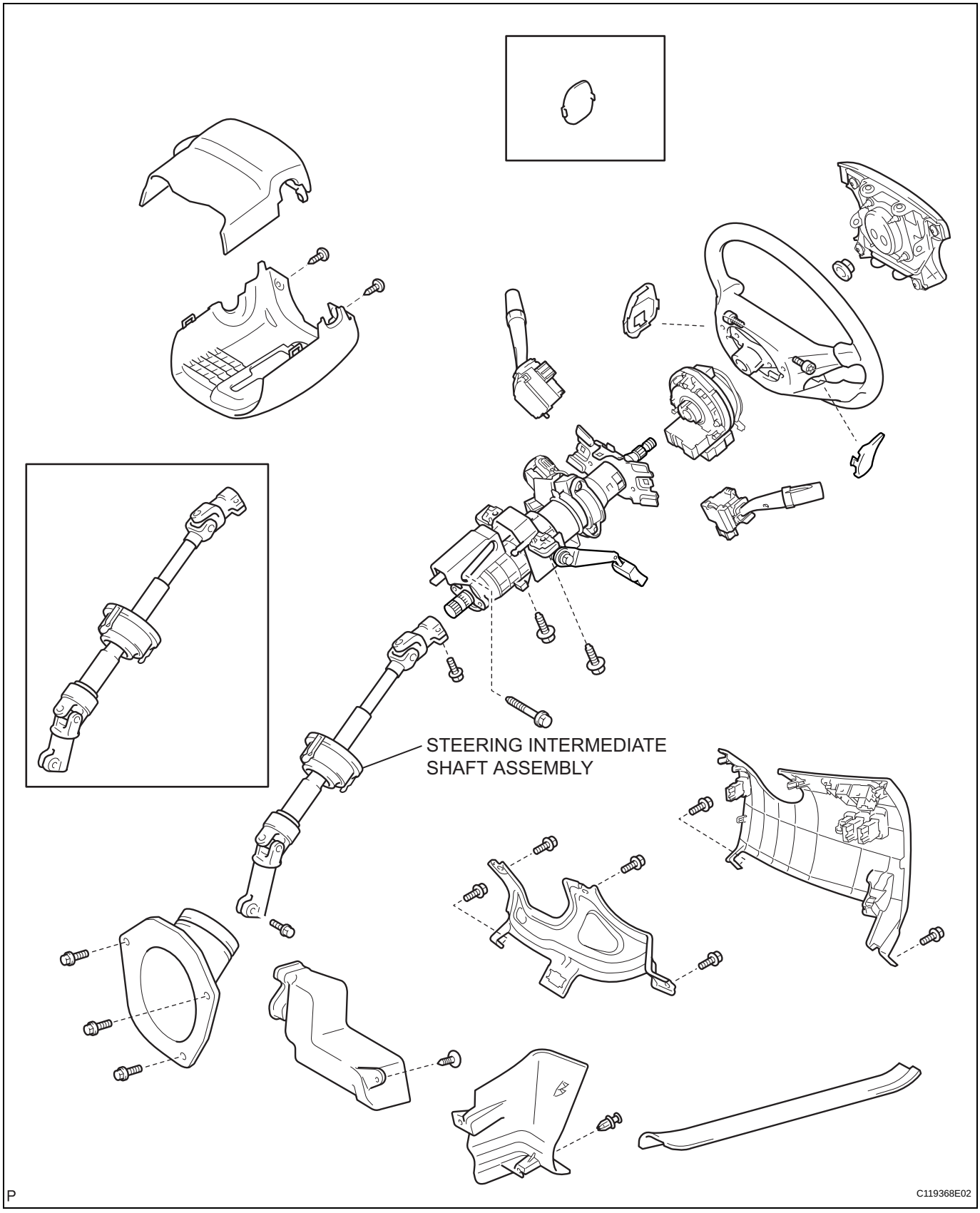

SP

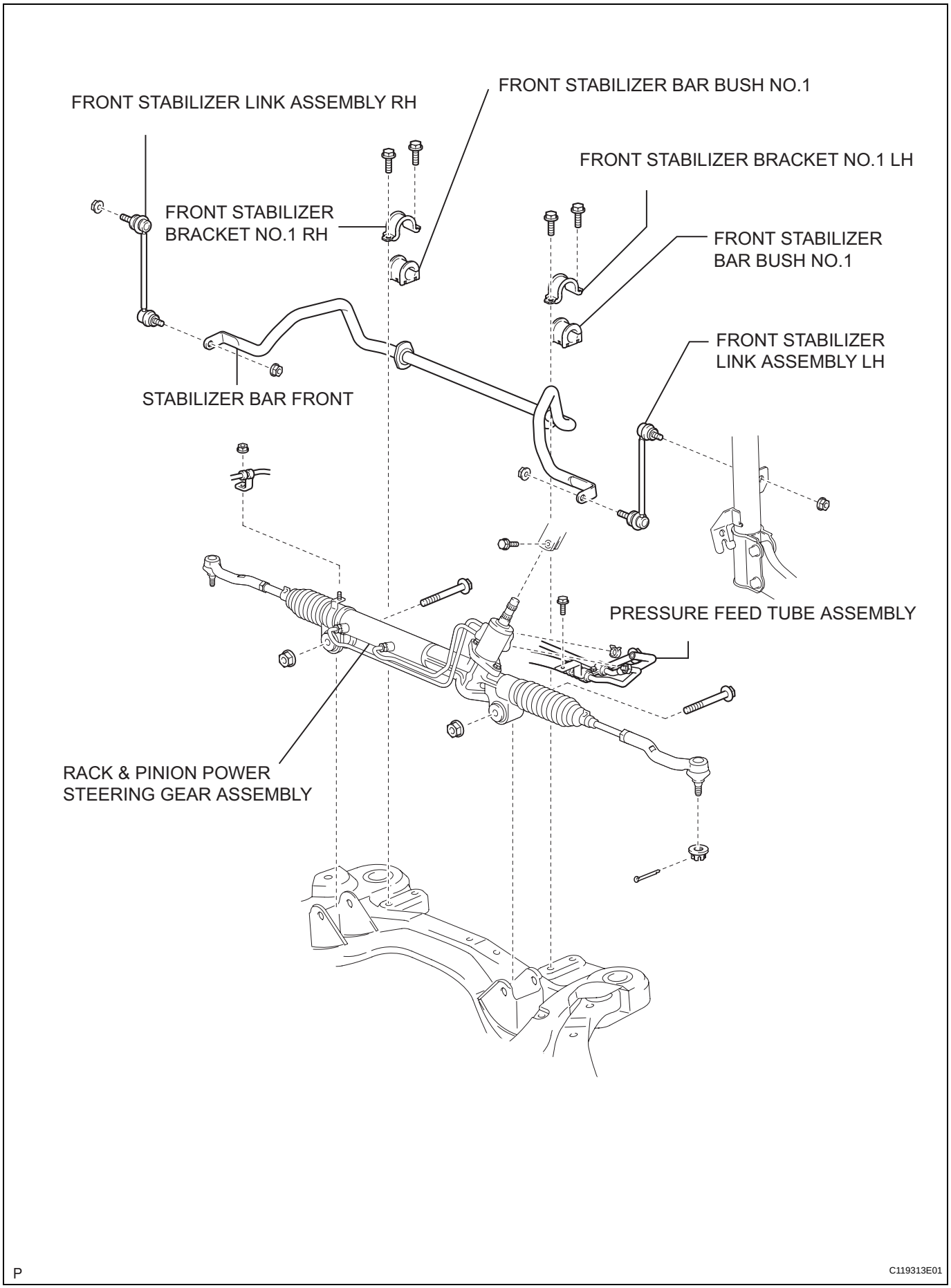
FRONT STABILIZER LINK ASSEMBLY RH
FRONT STABILIZER BAR BUSH NO.1
FRONT STABILIZER BRACKET NO.1 LH
FRONT STABILIZER BRACKET NO.1 RH
FRONT STABILIZER BAR BUSH NO.1
FRONT STABILIZER LINK ASSEMBLY LH
STABILIZER BAR FRONT
PRESSURE FEED TUBE ASSEMBLY
RACK & PINION POWER STEERING GEAR ASSEMBLY
P
C119313E01

SP