REMOVAL

1. **REMOVE FRONT WHEELS**
2. **REMOVE FRONT STABILIZER LINK ASSEMBLY LH**
   HINT:
   (See page SP-26)
3. **REMOVE FRONT STABILIZER LINK ASSEMBLY RH**
   HINT:
   Remove the RH side by the same procedures as the LH side.
4. **REMOVE CENTER EXHAUST PIPE ASSEMBLY**
   HINT:
   (See page EX-8)

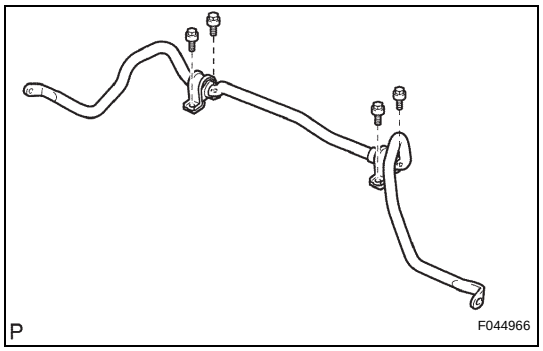

5. **REMOVE NO. 1 FRONT STABILIZER BRACKET LH**
   (a) Remove the 2 bolts, the front stabilizer bracket No.1 LH and the front stabilizer bracket No.2 LH.
6. **REMOVE NO. 1 FRONT STABILIZER BRACKET RH**
   HINT:
   Remove the RH side by the same procedures as the LH side.
7. **SEPARATE TIE ROD ASSEMBLY LH**
   HINT:
   (See page AH-4)
   SST 09628-62011
8. **SEPARATE TIE ROD ASSEMBLY RH**
   SST 09628-62011
   HINT:
   Remove the RH side by the same procedures as the LH side.
9. **SEPARATE PRESSURE FEED TUBE ASSEMBLY**
   HINT:
   (See page PS-21)
   SST 09023-12701
10. **SEPARATE STEERING INTERMEDIATE SHAFT ASSEMBLY**
    HINT:
    (See page PS-21)
11. **REMOVE RACK & PINION POWER STEERING GEAR ASSEMBLY**
    HINT:
    (See page PS-21)
12. **REMOVE MANIFOLD STAY**
    HINT:
    (See page EM-39)
13. **REMOVE EXHAUST MANIFOLD SUB-ASSEMBLY RH**
    HINT:
    (See page EM-37)
14. **REMOVE NO. 1 FRONT STABILIZER BAR BUSHING**

SP

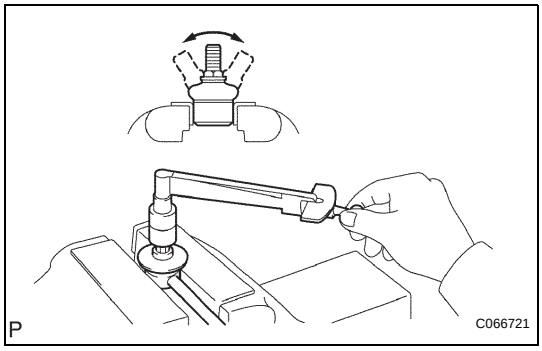

15. REMOVE FRONT STABILIZER BAR

INSPECTION

1. INSPECT FRONT STABILIZER LINK ASSEMBLY LH

(a) As shown in the illustration, flip the ball joint stud back and forth 5 times, before installing the nut.

(b) Using a torque wrench, turn the nut continuously at a rate of 2 to 4 seconds per 1 turn and take the torque reading on the 5th turn.

Turning torque:

0.05 to 1.96 N*m (0.5 to 20 kgf*cm, 0.4 to 17.4 in.*lbf)