REAR COIL SPRING

COMPONENTS

2WD DRIVE TYPE:

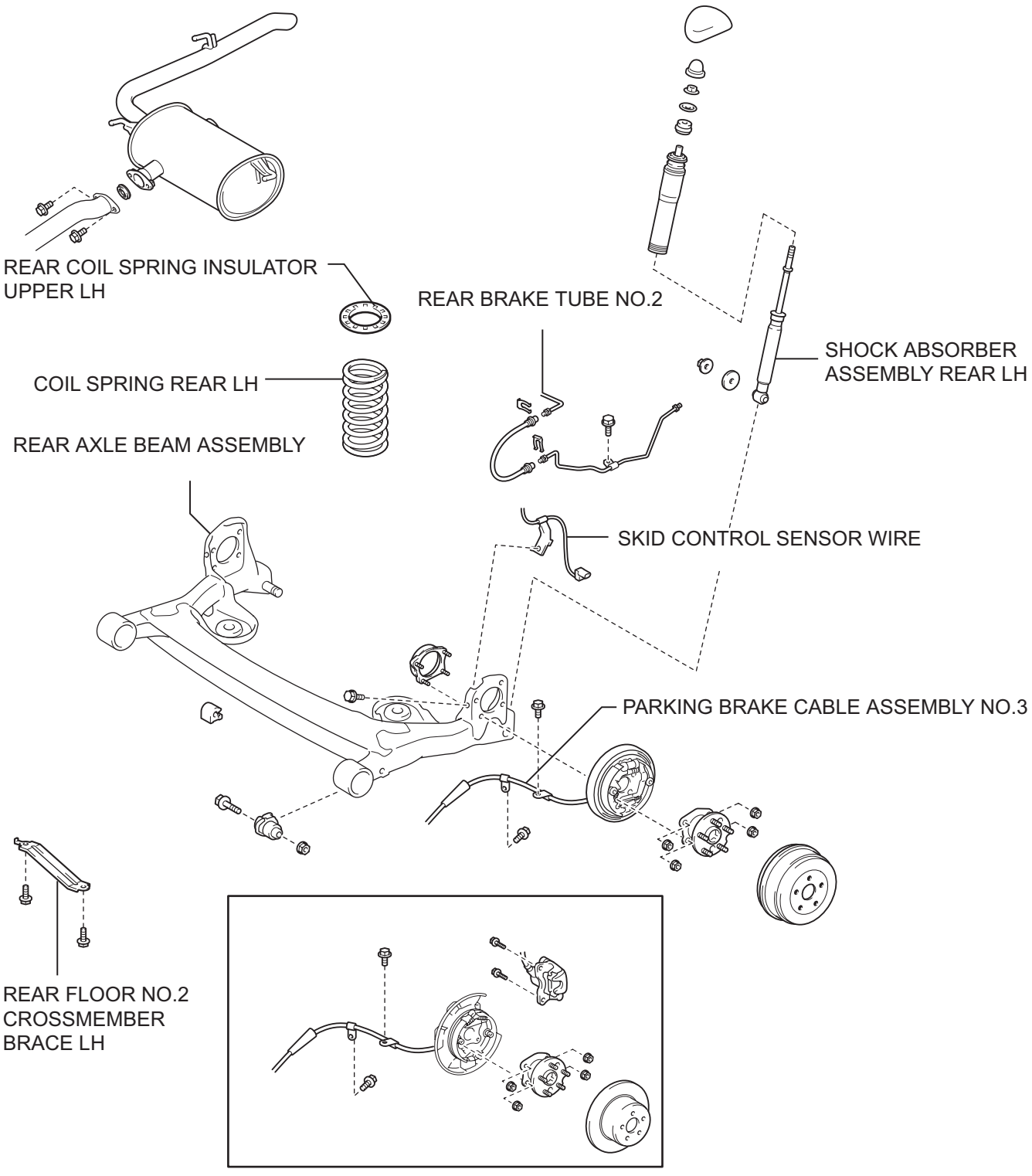

SP

P

C119315E02

4WD DRIVE TYPE:

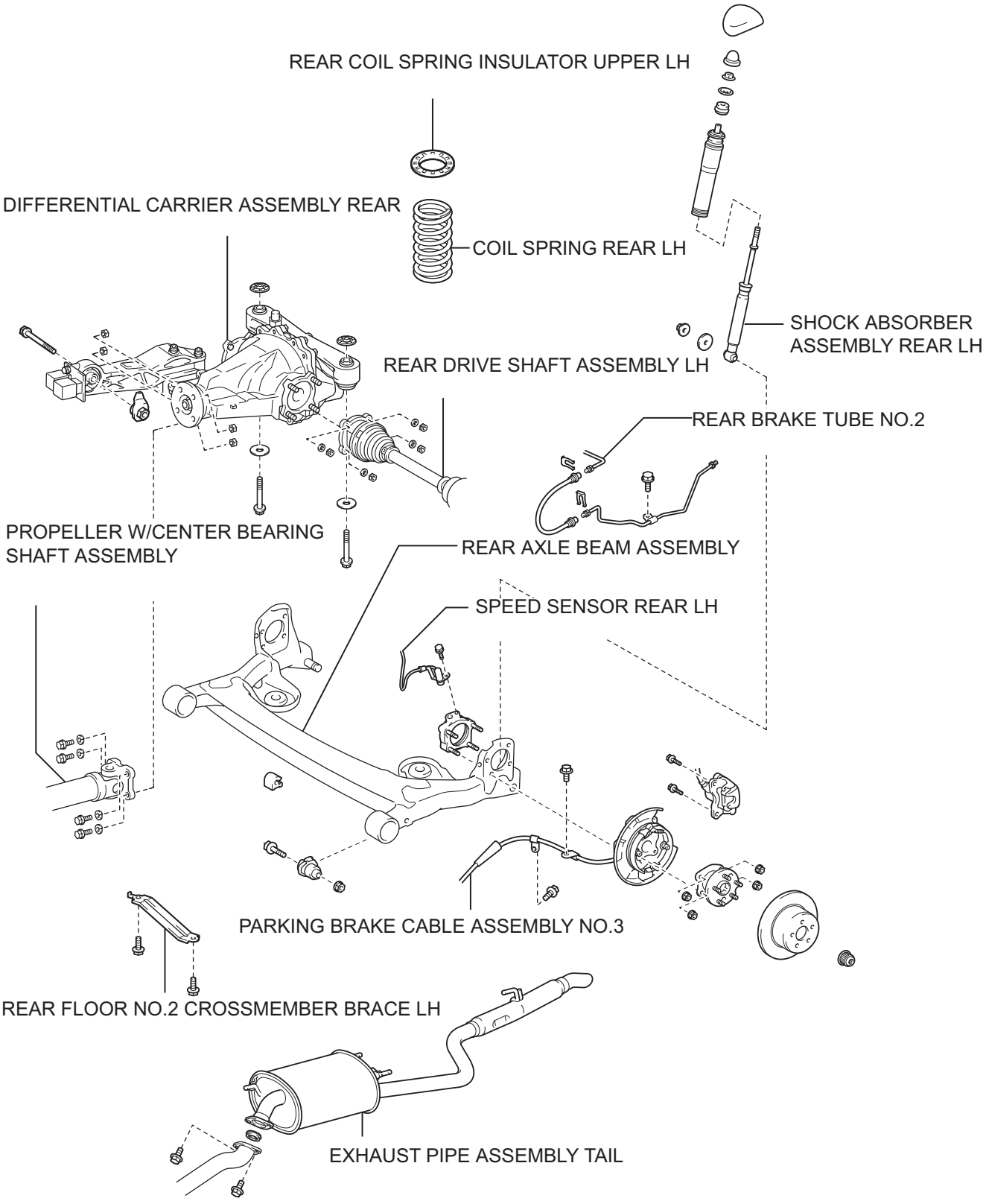

P

C119316E02

SP

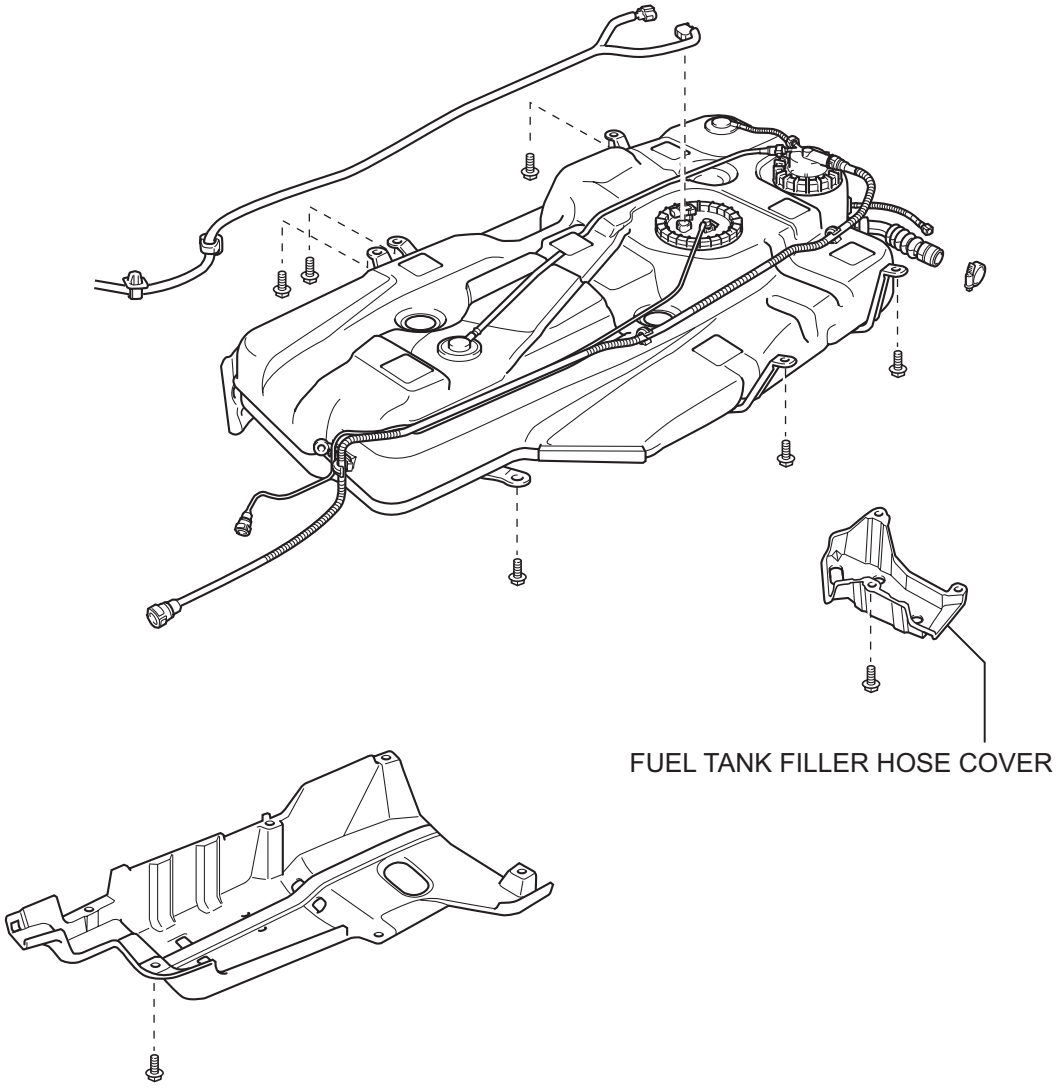

SP

Y

A119583E01