# REMOVAL

**1. REMOVE REAR WHEEL**

**2. REMOVE REAR SHOCK ABSORBER CAP LH**

(a) Remove the shock absorber head cover.

(b) Remove the shock absorber cap LH.

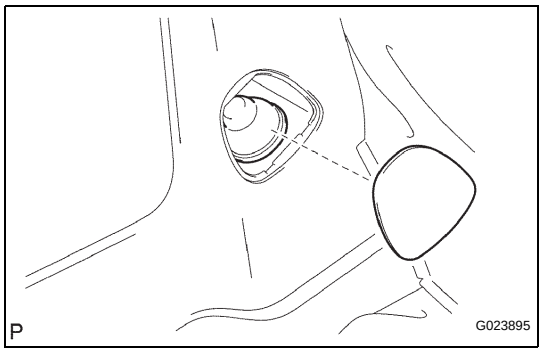


**3. REMOVE SHOCK ABSORBER ASSEMBLY REAR LH**

(a) Support the rear axle beam with a jack.

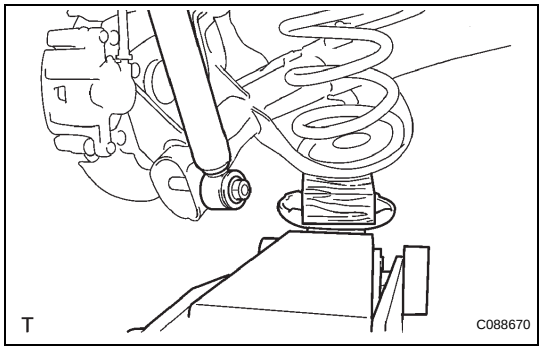


(b) Using a 6 mm hexagon wrench to hold the piston rod, remove the lock nut.

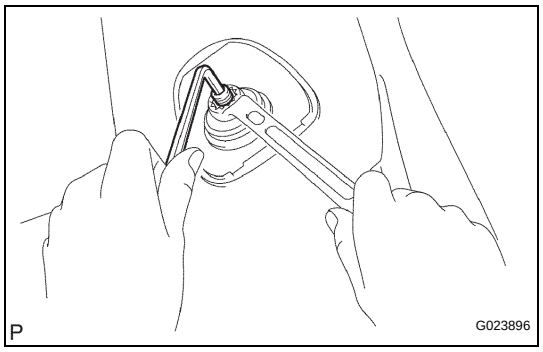


(c) Remove the rear shock absorber LH cushion retainer and rear shock absorber cushion No.1.

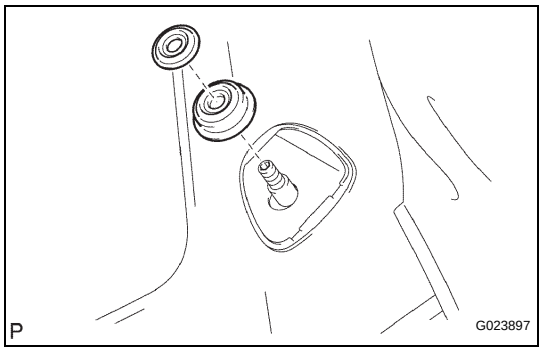


SP

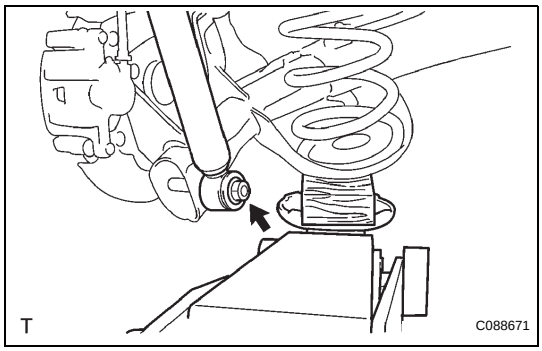


(d) Remove the nut, cushion retainer and shock absorber assembly rear LH.

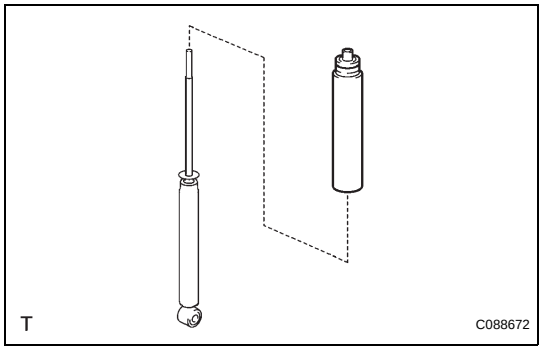


(e) Remove the rear spring bumper No.1 LH from the shock absorber assembly rear LH.

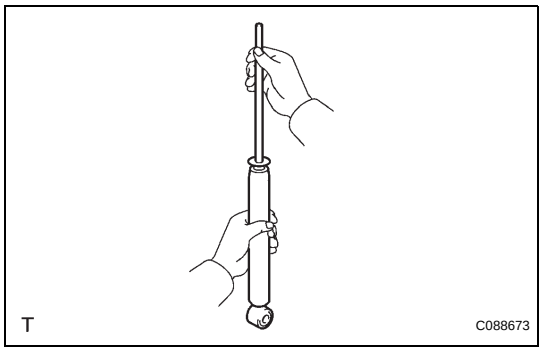


# INSPECTION

**1. INSPECT SHOCK ABSORBER ASSEMBLY REAR LH**

(a) Push down and pull up the shock absorber rod, and check that there is no unusual resistance or unusual operation sound.
If there is any malfunction, replace the shock absorber with a new one.
**NOTICE:**
**When disposing of the shock absorber, see DISPOSAL (See page SP-54).**

# INSTALLATION

**1. INSTALL SHOCK ABSORBER ASSEMBLY REAR LH**

(a) Install the rear spring bumper No.1 LH to the shock absorber assembly LH.

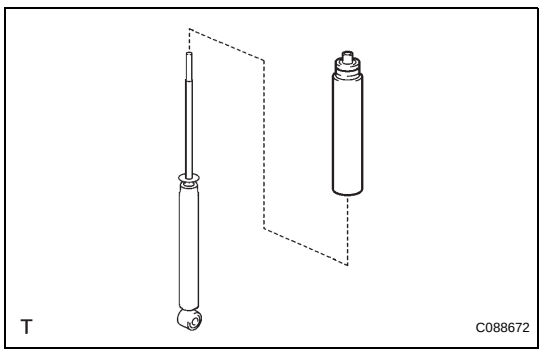


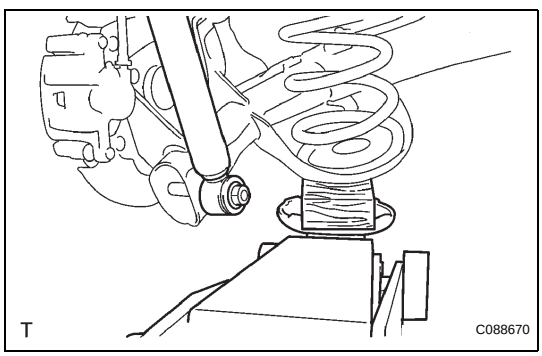


(b) Support the rear axle beam assembly with a jack.
(c) Install the rear shock absorber assembly rear LH, cushion retainer and nut to the rear axle beam.

SP

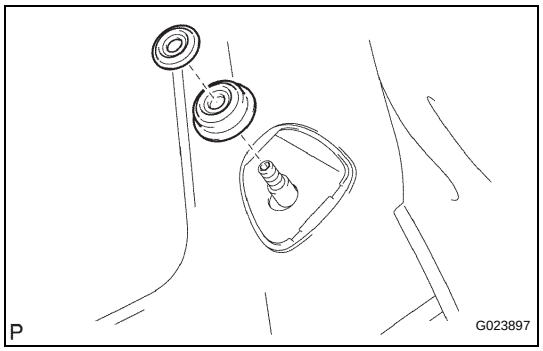


(d) Install the rear shock absorber cushion No.1 and rear shock absorber LH cushion retainer.
(e) Temporary tighten a new lock nut.

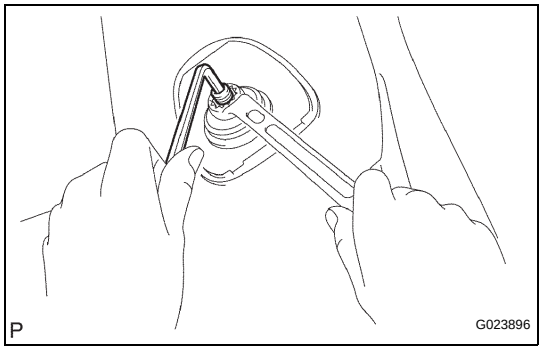


(f) Using a 6mm hexagon wrench to hold the piston rod, fully tighten the lock nut.
**Torque: 30 N*m (310 kgf*cm, 22 ft.*lbf)**

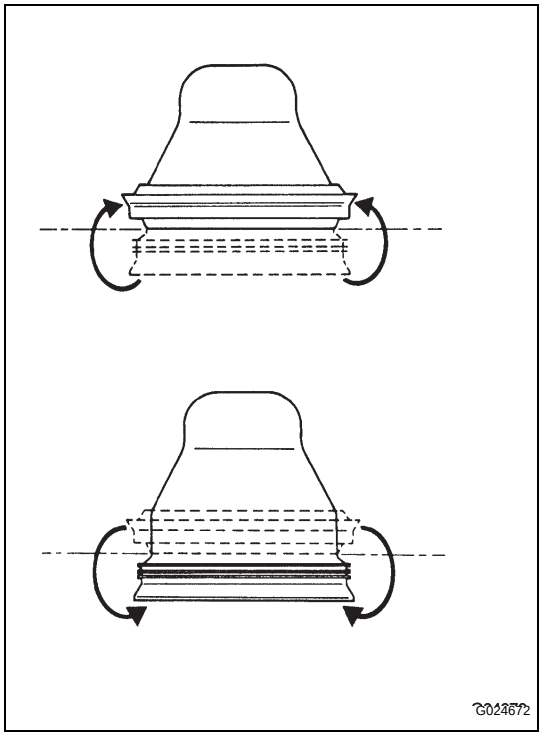


**2. INSTALL REAR SHOCK ABSORBER CAP LH**
(a) Install the shock absorber cap LH as shown in the illustration.

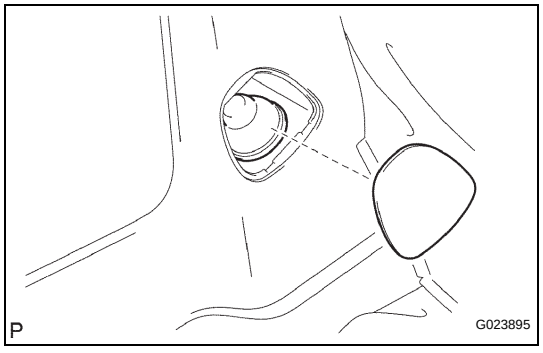


(b) Install the shock absorber head cover.

**3. INSTALL REAR WHEEL**
**Torque: 103 N*m (1,050 kgf*cm, 76 ft.*lbf)**

SP

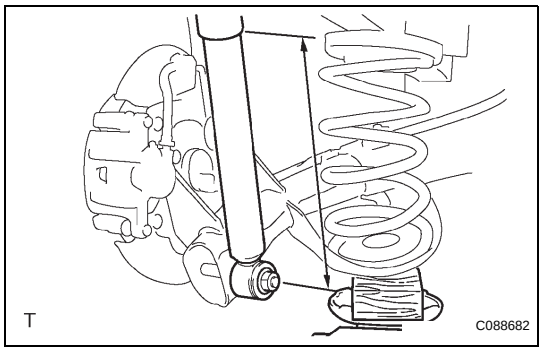


**4. FULLY TIGHTEN SHOCK ABSORBER ASSEMBLY REAR LH**

(a) Stabilize the shock absorber assembly rear LH.
If it is impossible to tighten the nut at this position, support the rear axle beam with a jack and load the rear compartment with a mass of approximately 90 kg (198 lb).
**Length of shock absorber:**
**2WD DRIVE TYPE:**
**234 mm (9.22 in.)**
**4WD DRIVE TYPE:**
**258 mm (10.16 in.)**

(b) Fully tighten the nut.
**Torque: 115 N*m (1,173 kgf*cm, 85 ft.*lbf)**

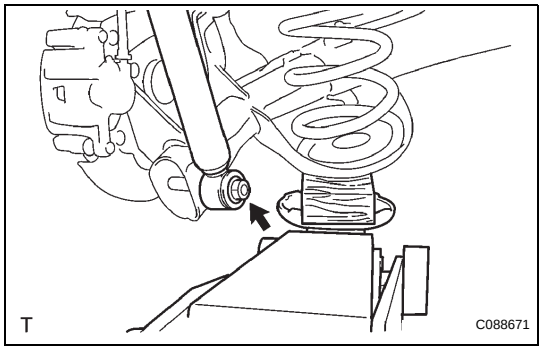


**5. INSPECT REAR WHEEL ALIGNMENT**
HINT:
(See page SP-9)

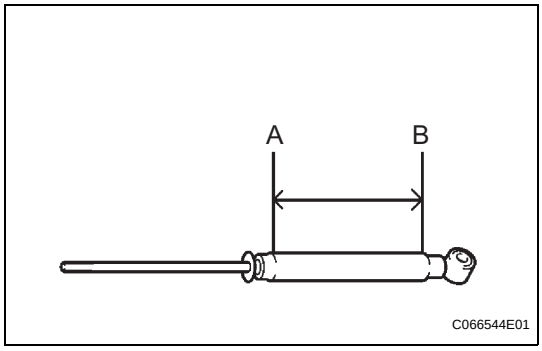


# DISPOSAL

**1. DISPOSE OF SHOCK ABSORBER ASSEMBLY REAR LH**

(a) Fully extend the shock absorber rod.
(b) Using a drill, make a hole in the cylinder as shown in the illustration to discharge the gas inside the cylinder.
**CAUTION:**
- **When drilling, since the fragments may fly out, work carefully.**
- **The discharged gas is colorless, odorless and non-poisonous.**