REAR SHOCK ABSORBER

COMPONENTS

2WD DRIVE TYPE:

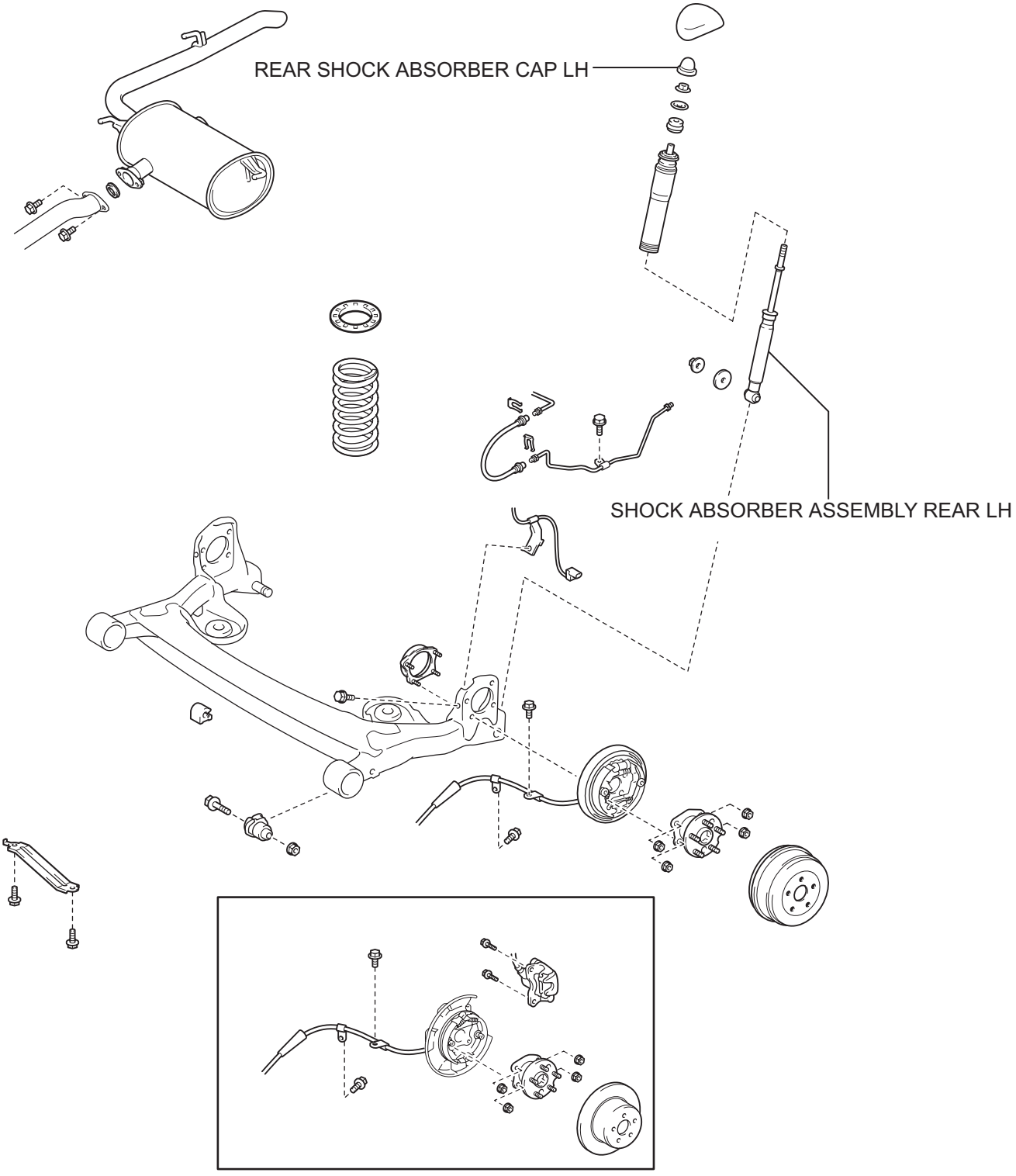

P

C119315E01

4WD DRIVE TYPE:

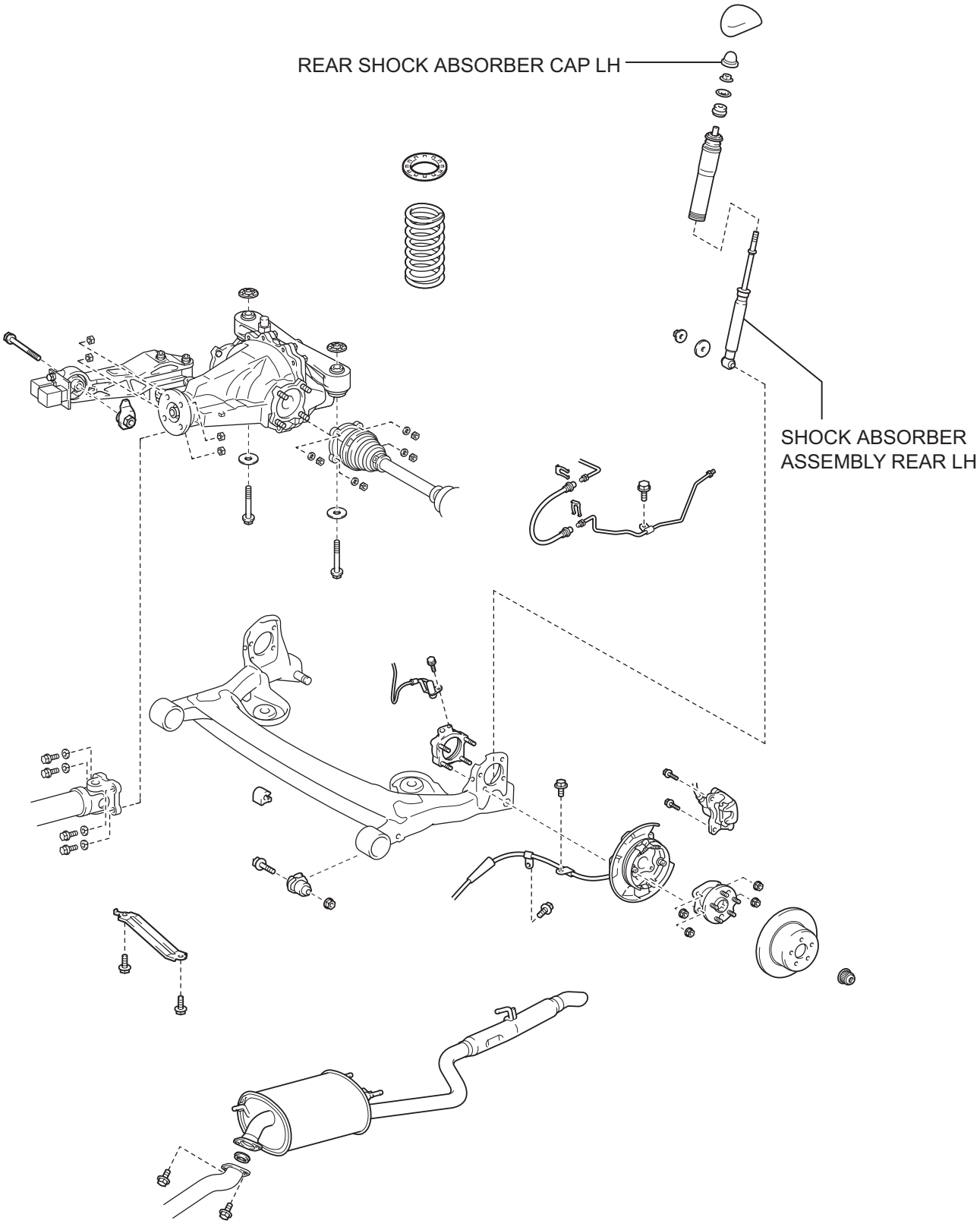

SP

P

C119316E01