INSTALLATION

1. INSTALL REAR AXLE BEAM DAMPER

(a) Install the rear axle beam damper to the rear axle beam assembly.

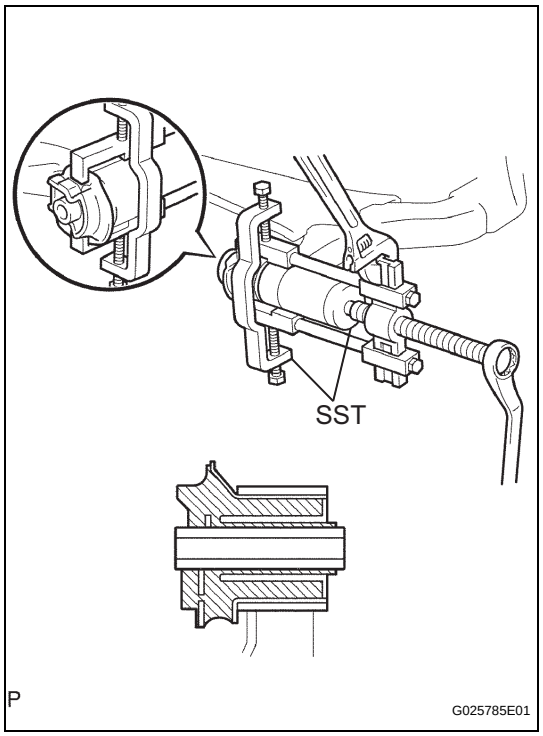

2. INSTALL REAR AXLE CARRIER BUSH LH

(a) Align the matchmarks on the axle beam assembly with the 2 notches of a new bushing and temporarily install the bushing to the rear axle beam assembly.

(b) Using SST, install the bushing to the axle beam.

SST 09710-04101, 09950-40011 (09951-04020, 09952-04010, 09953-04030, 09954-04020, 09955-04051, 09957-04010, 09958-04011), 09950-60010 (09951-00620)

NOTICE:

- **Hang the claw of SST to the bushing securely.**
- **Do not scratch the rubber portion of the bushing.**
- **Do not deform the bushing rib.**

3. INSTALL REAR AXLE CARRIER BUSH RH

SST 09710-04101, 09950-40011 (09951-04020, 09952-04010, 09953-04030, 09954-04020, 09955-04051, 09957-04010, 09958-04011), 09950-60010 (09951-00620)

HINT:

Install the RH side by the same procedures as the LH side.

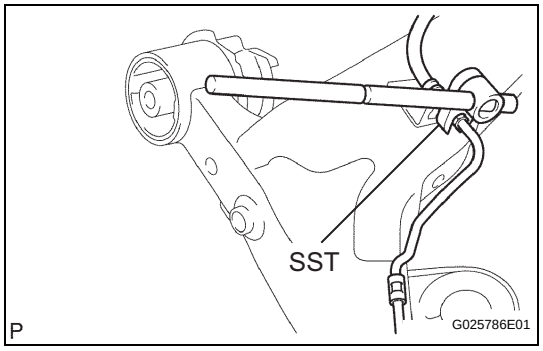

4. INSTALL REAR BRAKE TUBE FLEXIBLE HOSE

(a) Install the flexible hose and clip.

(b) Using SST, connect the brake tube to the flexible hose.

Torque: 15 N*m (153 kgf*cm, 11 ft.*lbf)

SST 09023-00101

HINT:

Install the RH side by the same procedures as the LH side.

5. TEMPORARILY TIGHTEN REAR AXLE BEAM ASSEMBLY

(a) Support the rear axle beam assembly with a jack.

(b) Install the rear axle beam assembly, 2 bolts and temporary tighten the 2 nuts.

6. INSTALL COIL SPRING REAR LH

HINT:

(See page SP-38)

7. INSTALL COIL SPRING REAR RH

HINT:

Install the RH side by the same procedures as the LH side.

8. CONNECT SHOCK ABSORBER ASSEMBLY REAR LH

HINT:

(See page SP-38)

9. **CONNECT SHOCK ABSORBER ASSEMBLY REAR RH**
HINT:
Connect the RH side by the same procedures as the LH side.

10. **INSTALL BRAKE BACKING PLATE SUB-ASSEMBLY REAR LH (for DRUM REAR BRAKE)**
(a) Install the 2 rear axle bearing retainer inner LH and parking brake plate sub-assembly LH.

11. **INSTALL BRAKE BACKING PLATE SUB-ASSEMBLY REAR RH (for DRUM REAR BRAKE)**
HINT:
Install the RH side by the same procedures as the LH side.

12. **INSTALL PARKING BRAKE PLATE SUB-ASSEMBLY LH (for DISC REAR BRAKE)**
(a) 2WD DRIVE TYPE: Install the 2 rear axle bearing retainer inner LH and parking brake plate sub-assembly LH to the rear axle beam assembly.
(b) 4WD DRIVE TYPE: Install the rear axle bearing retainer outer and parking brake plate sub-assembly LH to the rear axle beam assembly.

13. **INSTALL PARKING BRAKE PLATE SUB-ASSEMBLY RH (for DISC REAR BRAKE)**
HINT:
Install the RH side by the same procedures as the LH side.

14. **INSTALL REAR AXLE HUB & BEARING ASSEMBLY LH (for 2WD)**
HINT:
(See page AH-15)

15. **INSTALL REAR AXLE HUB & BEARING ASSEMBLY RH (for 2WD)**
HINT:
Install the RH side by the same procedures as the LH side.

16. **INSTALL REAR AXLE HUB & BEARING ASSEMBLY LH (for 4WD)**
HINT:
(See page AH-18)

17. **INSTALL REAR AXLE HUB & BEARING ASSEMBLY RH (for 4WD)**
HINT:
Install the RH side by the same procedures as the LH side.

18. **INSTALL REAR BRAKE DRUM SUB-ASSEMBLY (for DRUM REAR BRAKE)**

19. **INSTALL REAR DISC (for DISC REAR BRAKE)**

20. **INSTALL REAR DISC BRAKE CALIPER ASSEMBLY LH (for DISC REAR BRAKE)**
    (a) Install the 2 bolts and rear disc brake caliper assembly LH to the rear axle beam assembly.
    Torque: 88 N*m (897 kgf*cm, 65 ft.*lbf)

21. **INSTALL REAR DISC BRAKE CALIPER ASSEMBLY RH (for DISC REAR BRAKE)**
    HINT:
    Install the RH side by the same procedures as the LH side.

22. **CONNECT REAR BRAKE TUBE NO.2**
    HINT:
    (See page SP-38)
    SST 09023-00101

23. **CONNECT REAR BRAKE TUBE NO.1**
    SST 09023-00101
    HINT:
    Connect the RH side by the same procedures as the LH side.

24. **INSTALL PARKING BRAKE CABLE ASSEMBLY NO.3**
    HINT:
    (See page SP-38)

25. **INSTALL PARKING BRAKE CABLE ASSEMBLY NO.2**
    HINT:
    Install the RH side by the same procedures as the LH side.

26. **INSTALL DIFFERENTIAL CARRIER ASSEMBLY REAR (for 4WD)**
    HINT:
    (See page DF-8)

27. **INSTALL REAR DRIVE SHAFT ASSEMBLY LH (for 4WD)**
    HINT:
    (See page AH-18)

28. **INSTALL REAR DRIVE SHAFT ASSEMBLY RH (for 4WD)**
    HINT:
    Install the RH side by the same procedures as the LH side.

29. **INSTALL REAR AXLE SHAFT LH NUT (for 4WD)**
    HINT:
    (See page AH-18)

30. **INSTALL REAR AXLE SHAFT RH NUT (for 4WD)**
    HINT:
    Install the RH side by the same procedures as the LH side.

31. **INSTALL PROPELLER W/CENTER BEARING SHAFT ASSEMBLY (for 4WD)**

32. **CONNECT SKID CONTROL SENSOR WIRE (for 2WD)**
HINT:
(See page SP-38)
HINT:
Connect the RH side by the same procedures as the LH side.

33. **INSTALL SPEED SENSOR REAR LH (for 4WD)**
HINT:
(See page SP-38)

34. **INSTALL SPEED SENSOR REAR RH (for 4WD)**
HINT:
Install the RH side by the same procedures as the LH side.

35. **INSTALL EXHAUST PIPE ASSEMBLY TAIL**
HINT:
- 2WD DRIVE TYPE (See page EX-2)
- 4WD DRIVE TYPE (See page EX-8)

36. **BLEED BRAKE LINE**
HINT:
(See page BR-3)

37. **INSTALL REAR WHEEL**
Torque: 103 N*m (1,050 kgf*cm, 76 ft.*lbf)

38. **INSPECT BRAKE FLUID LEVEL IN RESERVOIR**

39. **STABILIZE SUSPENSION**
HINT:
(See page SP-52)

40. **FULLY TIGHTEN SHOCK ABSORBER ASSEMBLY REAR LH**
HINT:
(See page SP-52)

41. **FULLY TIGHTEN SHOCK ABSORBER ASSEMBLY REAR RH**
HINT:
Fully tighten the RH side by the same procedures as the LH side.

42. **FULLY TIGHTEN REAR AXLE BEAM ASSEMBLY**
HINT:
(See page SP-38)

43. **INSTALL REAR FLOOR NO.2 CROSSMEMBER BRACE LH**
HINT:
(See page SP-38)

44. **INSTALL REAR FLOOR NO.2 CROSSMEMBER BRACE RH**
HINT:
Install the RH side by the same procedures as the LH side.

45. INSTALL FUEL TANK FILLER HOSE COVER
HINT:
(See page SP-38)

46. INSPECT REAR WHEEL ALIGNMENT
HINT:
(See page SP-9)

47. CHECK ABS SPEED SENSOR SIGNAL
(a) ABS WITH EBD SYSTEM (See page BC-2)
(b) ABS WITH EBD & BA & TRAC & VSC SYSTEM (See page BC-68)