# INSPECTION

**1. INSPECT TIRES**

(a) Check the tires for wear and proper inflation pressure.

**Cold tire inflation pressure**

| Tire size | Front kPa (kgf*cm$^2$, psi) | Rear kPa (kgf*cm$^2$, psi) |
|---|---|---|
| **P215/65R16 96T<br>P225/60R17 98T** | **240 (2.4, 35)** | **240 (2.4, 35)** |

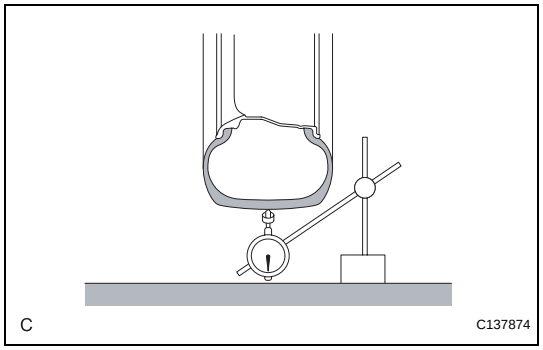


(b) Using a dial indicator, check the runout of the tires.
**Tire runout:**
**1.4 mm (0.055 in.) or less**

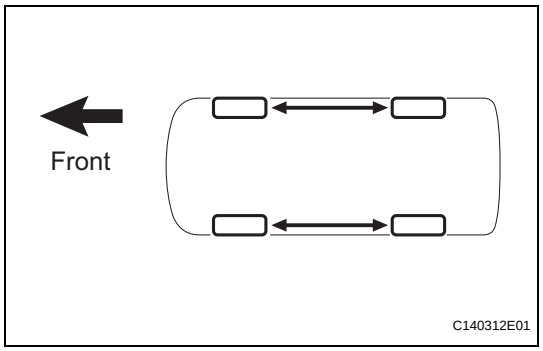


**2. ROTATE TIRES**

HINT:
Rotate the tires as shown in the illustration.

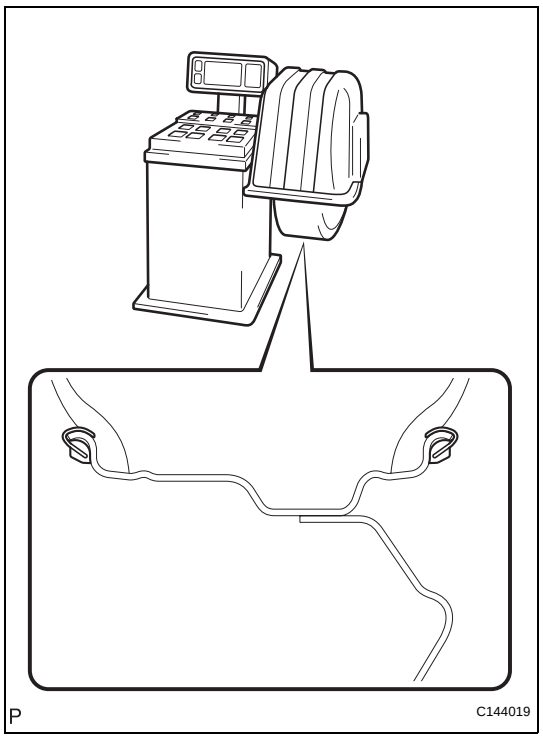


**3. INSPECT WHEEL BALANCE (for Steel Wheel)**

(a) Check and adjust the off-the-car balance.
**Imbalance after adjustment:**
**8.0 g (0.018 lb.) or less.**
HINT:
If necessary, check and adjust the on-the-car balance.

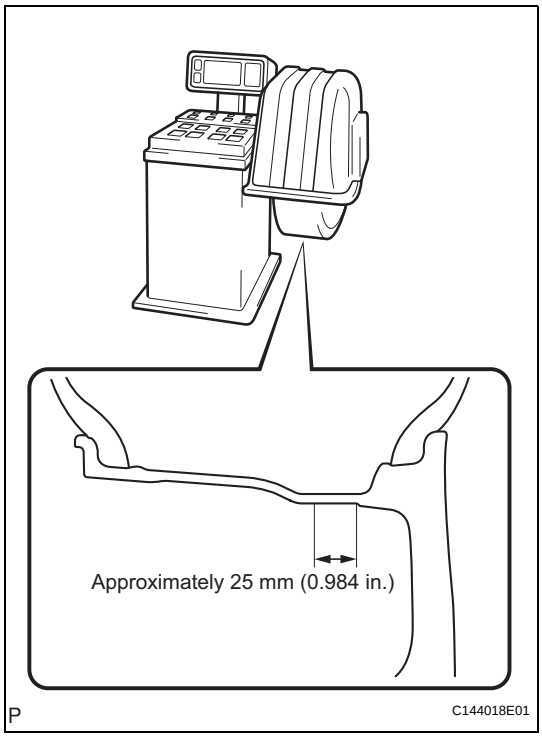


4. **INSPECT WHEEL BALANCE (for Non-steel Wheel)**
   (a) Check and adjust the off-the-car balance.
   **Imbalance after adjustment:**
   **8.0 g (0.018 lb.) or less.**
   **NOTICE:**
   - **Use a cleaning detergent to remove dirt, oil and water from the surface where the balance weight is to be adhered.**
   - **Do not touch the sticking surface of the tape.**
   - **Adhere the sticking type balance weight to the flat position shown in the illustration.**
   - **Push the balance weight securely with a finger to adhere it to the position.**
   - **Do not reuse the balance weight.**

   HINT:
   - The inner side balance weight should be installed by clipping it to the rim.
   - If necessary, check and adjust the on-the-car balance.

5. **INSPECT FRONT AXLE HUB BEARING LOOSENESS**
   HINT:
   See page AH-5.

6. **INSPECT REAR AXLE HUB BEARING LOOSENESS (for 2WD)**
   HINT:
   See page AH-16.

7. **INSPECT REAR AXLE HUB BEARING LOOSENESS (for 4WD)**
   HINT:
   See page AH-19.

8. **INSPECT FRONT AXLE HUB RUNOUT**
   HINT:
   See page AH-5.

9. **INSPECT REAR AXLE HUB RUNOUT (for 2WD)**
   HINT:
   See page AH-16.

10. **INSPECT REAR AXLE HUB RUNOUT (for 4WD)**
    HINT:
    See page AH-19.

# REPAIR

## 1. INTRODUCTION

(a) This section introduces ways to determine whether the run-flat tire is repairable or not. Repair must be performed by following the appropriate procedures. If a flat tire occurs, it is possible to drive a maximum of 160 km (100 miles) at a speed below 90 km/h (55 mph) due to the reinforced sidewalls. However, if the customer continues to drive with low tire pressure (less than about 100 kPa (1.0 kgf/cm$^2$, 14.5 psi) and tire pressure warning light is on), the inside of the sidewall will gradually deteriorate and the run-flat performance may be reduced. Therefore, the tires may require replacement. However, there are some cases where it is possible to repair a run-flat tire using the same repair method as for normal tires. Use the following flowchart to determine if a run-flat tire is repairable.

**NOTICE:**

**When performing repairs, follow the Rubber Manufacturers Association (RMA) repair procedures.**

## 2. REPAIR PROCEDURE (CUSTOMER INTERVIEW)

(a) The tire pressure warning system can help determine the history of the tire's use. The driving conditions the tire was subjected to while the tire pressure warning light was on should be obtained from the customer. Also, make sure to ask the following questions.

(1) Was the vehicle driven at a speed over 90 km/h (55 mph) with the tire pressure warning light on?

(2) Was the vehicle driven over 160 km (100 miles) with the tire pressure warning light on?

A "Yes" response to either of the above will greatly reduce the chance of tire repairability.

## 3. TECHNICIAN TIRE INSPECTION

(a) After the customer interview, it is necessary to conduct a thorough inspection of the tire after it has been removed from the wheel. As it is difficult to identify a tire with low pressure visually, check the pressure of each tire to determine the tire(s) causing the low-pressure warning. If the tire is found to be repairable, follow the RMA repair procedures.

**NOTICE:**

**The deflated tire may be extremely hot, which may cause injury, so allow the tire to cool prior to handling.**

**4. TIRE PRESSURE INSPECTION**

(a) Inspection procedure

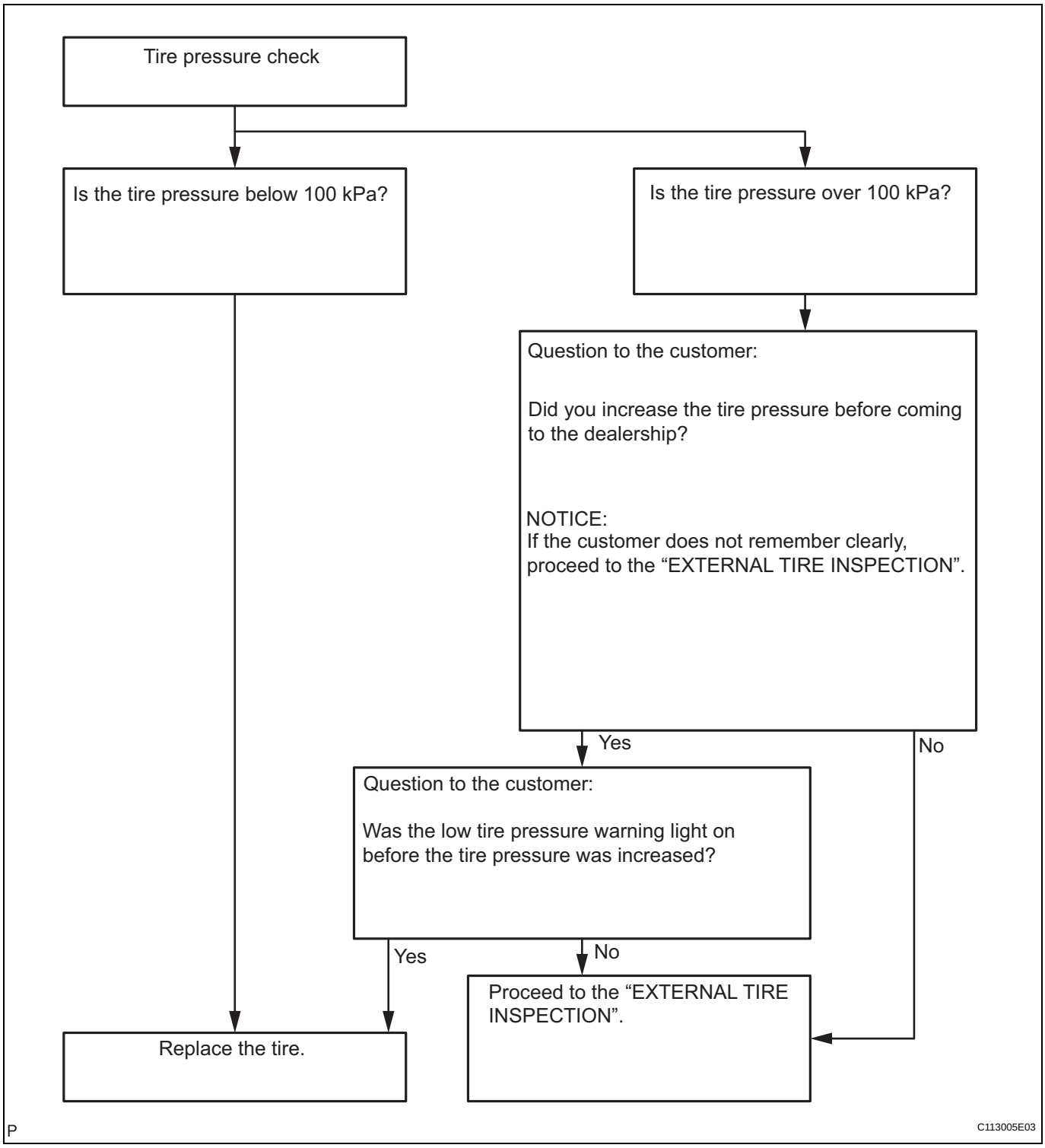

**5. EXTERNAL TIRE INSPECTION**

(a) Inspection procedure

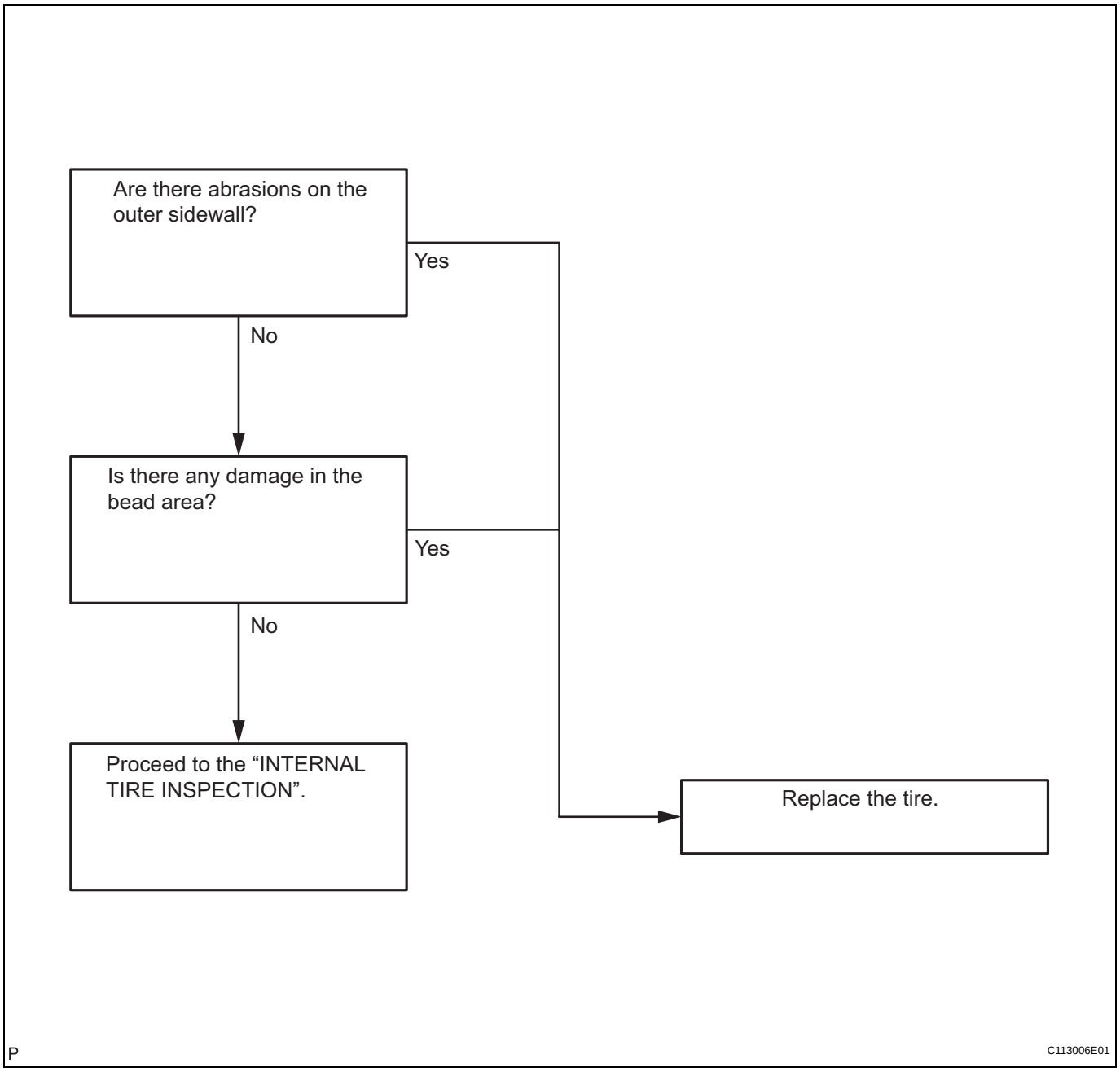


TW

**6. INTERNAL TIRE INSPECTION**

(a) Inspection procedure

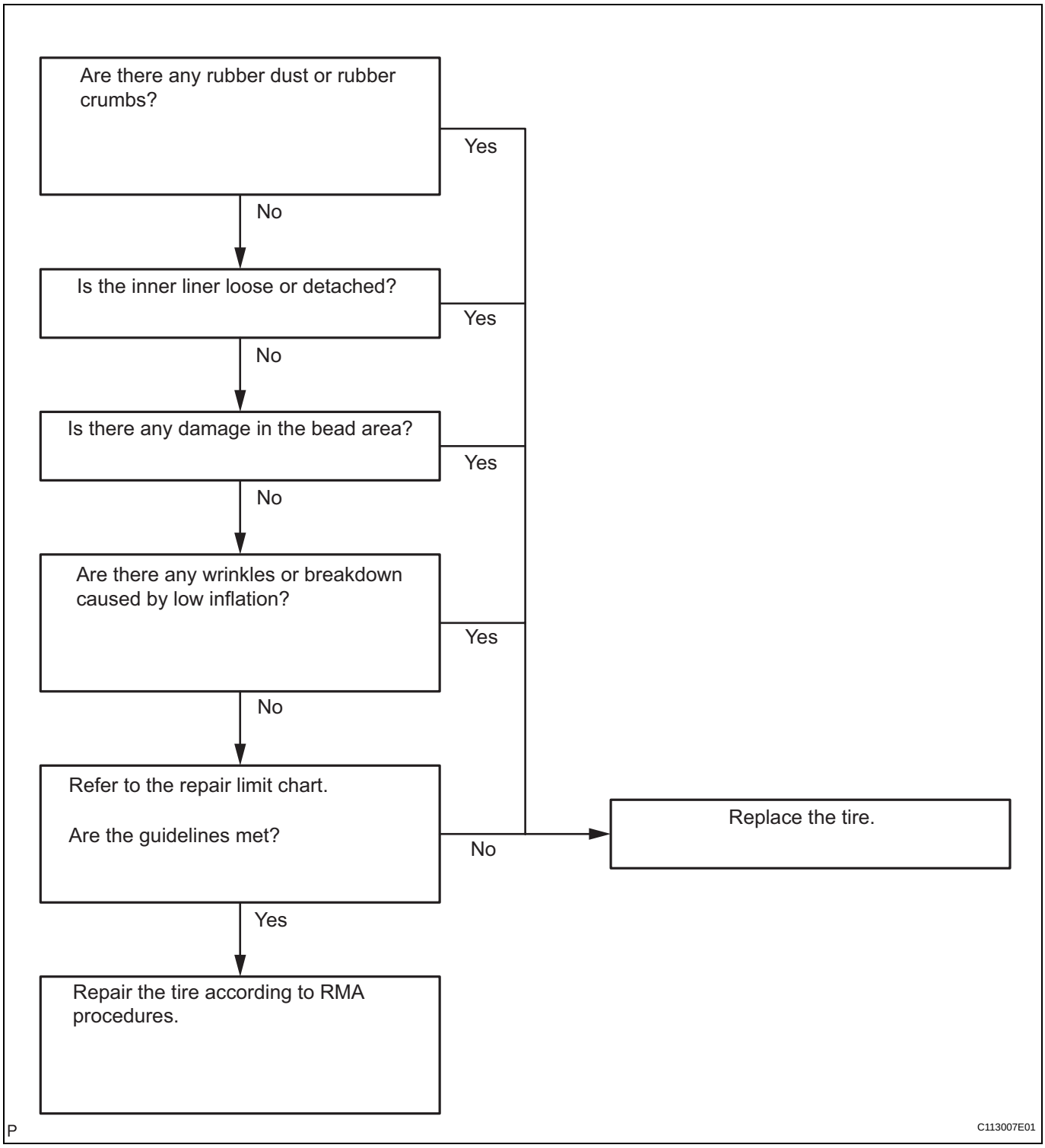

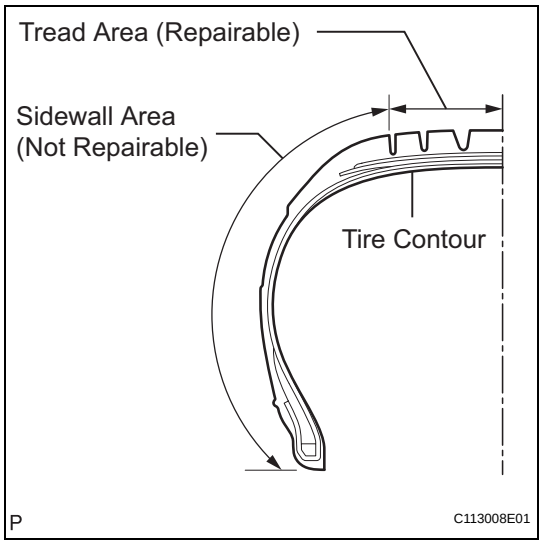


**7. RUN-FLAT TIRE REPAIR LIMIT CHART**

(a) Tires that have a penetration in the tread area but meet the above inspection criteria may be repaired if the guidelines listed below are also met.

**Puncture condition (Tread area only)**

| Diameter (Maximum) | Number (Maximum) | Distance between holes (Minimum) |
|---|---|---|
| 6.4 mm (0.25 in.) | 2 | 406 mm (16 in.) |