DTC	C2121/21	No Signal from Transmitter ID1

DTC	C2122/22	No Signal from Transmitter ID2

DTC	C2123/23	No Signal from Transmitter ID3

DTC	C2124/24	No Signal from Transmitter ID4

DTC	C2181/81	Transmitter ID1 not Received (Test Mode DTC)

DTC	C2182/82	Transmitter ID2 not Received (Test Mode DTC)

DTC	C2183/83	Transmitter ID3 not Received (Test Mode DTC)

DTC	C2184/84	Transmitter ID4 not Received (Test Mode DTC)

DESCRIPTION

The tire pressure warning valve and transmitters that are installed in the tire and wheel assemblies measure the air pressure of the tires. The measured values are transmitted to the tire pressure warning antenna and receiver on the body as radio waves and then sent to the tire pressure warning ECU. The ECU compares the measured air pressure values with the air pressure threshold. When the measured air pressure value is less than this threshold, the warning light in the combination meter comes on.

The tire pressure warning valve and transmitters constantly send radio waves to the tire pressure warning antenna and receiver.

Under the following conditions below, the tire pressure warning antenna and receiver is unable to receive the signals from the tire pressure warning valves and transmitters, and a DTC is stored.

- Facilities or devices that use similar radio frequencies are located in the vicinity of the vehicle.
- Devices using similar radio frequencies are used in the vehicle.
- The goods which obstruct the radio signal of the valve and transmitter, for example, tire chain or window film.

HINT:

When no signals are received for 20 minutes or more, a DTC is output.

DTCs from C2121/21 to C2124/24 can only be cleared by using the tester. DTCs from C2181/81 to C2184/84 can be cleared when the transmitter in the tire pressure warning valve and transmitter sends a forced transmission signal or test mode ends. DTCs from C2181/81 to C2184/84 are output only in test mode.

DTC No.	DTC Detection Condition	Trouble Area
C2121/21 C2122/22 C2123/23 C2124/24	These DTCs are detected when no signals are received for 20 minute drive or more.	• Tire pressure warning valve and transmitter • Tire pressure warning antenna and receiver • Wire harness or connector • Tire pressure warning ECU
C2181/81 C2182/82 C2183/83 C2184/84	Malfunction in the transmitting/receiving circuit	• Tire pressure warning valve and transmitter • Tire pressure warning antenna and receiver • Wire harness or connector • Tire pressure warning ECU

HINT:

It is necessary to perform the procedure to identify the tire pressure warning valve and transmitter that is malfunctioning because it cannot be identified by the output DTC.

WIRING DIAGRAM

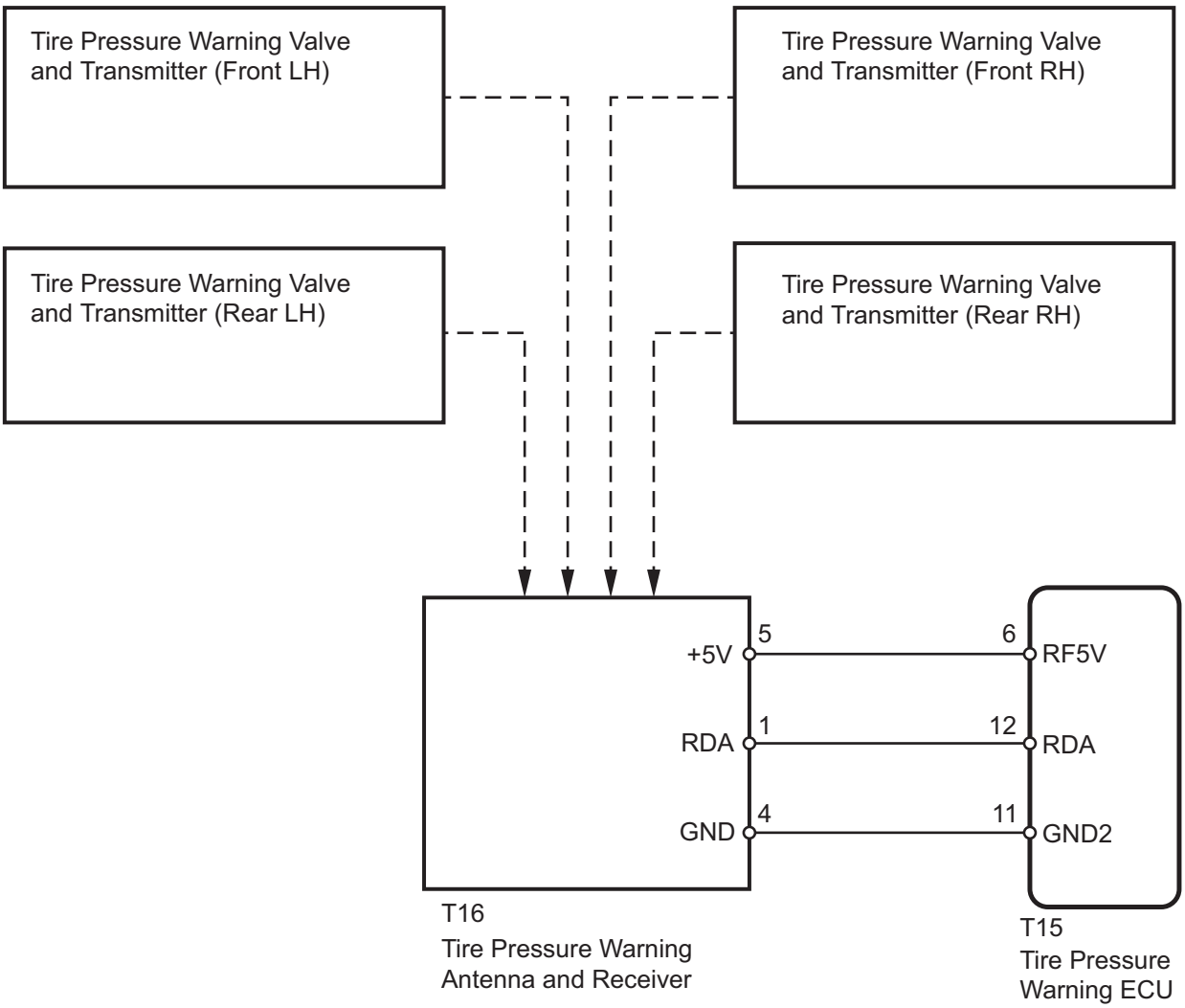

INSPECTION PROCEDURE

NOTICE:

- **When replacing the tire pressure warning ECU, read the IDs stored in the ECU using the intelligent tester and write them down before removal.**
- **It is necessary to perform initialization (See page TW-23) after registration (See page TW-20) of the transmitter IDs into the tire pressure warning ECU after the ECU and/or valve and transmitter have been replaced.**

TW

1	CHECK FREQUENCY RECEIVING CONDITION

(a) Check if the vehicle is not located in areas such as described below:

(1) Facilities or devices that use similar radio frequencies are located in the vicinity of the vehicle.
HINT:
If the vehicle is located in areas described above, the tire pressure warning light may come on after blinking 1 minute only in a particular area.
(2) Devices using similar radio frequencies are used in the vehicle.
OK:
Facilities, or devices that use similar radio frequencies are not located in the vicinity of the vehicle.
HINT:
Radio frequency may be interrupted due to surroundings or devices installed by the user.

NG → **CHECK IF ANY DEVICE IS INSTALLED BY USER**

OK

2 IDENTIFY TRANSMITTER CORRESPONDING TO DTC

(a) Set the tire pressure to the appropriate specified values.

Cold tire inflation pressure

Tire Size	kPa (kgf/cm^2, psi)
P215/65R16	240 (2.4, 35)
P225/60R17	

(b) Make sure that the ignition switch is off.
(c) Connect the intelligent tester to the DLC3.
(d) Turn the ignition switch to the ON position.
(e) Select "TIREPRESS" by following the prompts displayed on the intelligent tester.

TIRE PRESSURE:

Tester Display	Measurement Item/Range	Normal Condition	Diagnostic Note
TIREPRESS1	ID1 tire inflation pressure (Absolute pressure) / min.: 100 kPa (1 kgf/cm^2, 14 psi) max.: 449.35 kPa (4.5 kgf/cm^2, 63 psi)	Actual tire inflation pressure	If 100 kPa (1 kgf/cm^2, 14 psi) for absolute pressure is displayed, the data has not been received.*
TIREPRESS2	ID2 tire inflation pressure (Absolute pressure) / min.: 100 kPa (1 kgf/cm^2, 14 psi) max.: 449.35 kPa (4.5 kgf/cm^2, 63 psi)	Actual tire inflation pressure	If 100 kPa (1 kgf/cm^2, 14 psi) for absolute pressure is displayed, the data has not been received.*
TIREPRESS3	ID3 tire inflation pressure (Absolute pressure) / min.: 100 kPa (1 kgf/cm^2, 14 psi) max.: 449.35 kPa (4.5 kgf/cm^2, 63 psi)	Actual tire inflation pressure	If 100 kPa (1 kgf/cm^2, 14 psi) for absolute pressure is displayed, the data has not been received.*
TIREPRESS4	ID4 tire inflation pressure (Absolute pressure) / min.: 100 kPa (1 kgf/cm^2, 14 psi) max.: 449.35 kPa (4.5 kgf/cm^2, 63 psi)	Actual tire inflation pressure	If 100 kPa (1 kgf/cm^2, 14 psi) for absolute pressure is displayed, the data has not been received.*

HINT:
*: It may take about 5 to 6 minutes until the values are displayed.

(f) Rapidly reduce the tire pressure for each wheel at least 40 kPa (0.41 kg/cm^2, 5.8 psi) within 30 seconds.

(g) Check the DATA LIST.

NOTICE:

- **It takes about 5 to 6 minutes to display the updated tire pressure data.**
- **When no "TIREPRESS" data has changed, reset the tire pressure to the appropriate specified value and rotate the tire 90 to 270 degrees. Then rapidly release the tire pressure and recheck it.**
- **Record the transmitter ID of which "TIREPRESS" data corresponds to each tire.**

(h) After confirming that one of "TIREPRESS" data for one tire (ID1 to ID4) has changed, repeat this procedure one by one. Identify the transmitter that corresponds to DTC.

Result

Result	Proceed to
One or more of transmitters abnormal	A
All normal	B
All abnormal	C

A	Go to step 4
B	END

C

3 CHECK HARNESS AND CONNECTOR (ECU - RECEIVER)

Front view of wire harness connector:
(to Tire Pressure Warning ECU)

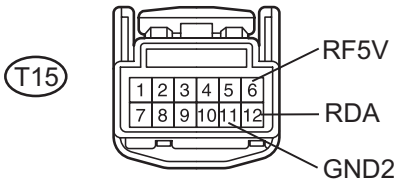

Front view of wire harness connector:
(to Tire Pressure Warning Antenna and Receiver)

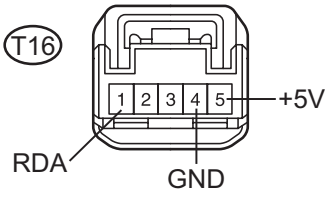

P C148708E14

(a) Disconnect the T15 ECU connector.
(b) Disconnect the T16 receiver connector.
(c) Measure the resistance according to the value(s) in the table below.

Standard resistance

Tester Connection	Condition	Specified Condition
T15-12 (RDA) - T16-1 (RDA)	Always	Below 1 Ω
T15-11 (GND2) - T16-4 (GND)		
T15-6 (RF5V) - T16-5 (+5V)		
T15-12 (RDA) - Body ground		10 kΩ or higher
T15-11 (GND2) - Body ground		
T15-6 (RF5V) - Body ground		

NG → **REPAIR OR REPLACE HARNESS OR CONNECTOR**

OK

4 INSPECT TIRE PRESSURE WARNING VALVE AND TRANSMITTER

(a) Make sure that the ignition switch is off.
(b) Connect the intelligent tester to the DLC3.
(c) Turn the ignition switch to the ON position.
(d) Select REGIT ID CODE by following the prompts displayed on the intelligent tester.

TIRE PRESSURE:

Tester Display	Measurement Item/Range	Normal Condition	Diagnostic Note
REGIT ID1 CODE	Registered ID1 code/ min.: 0, max.: FFFFFF*	The ID No. registered in the transmitter ID1 is displayed	*: Displayed only when the ID No. is not registered.
REGIT ID2 CODE	Registered ID2 code/ min.: 0, max.: FFFFFF*	The ID No. registered in the transmitter ID2 is displayed	*: Displayed only when the ID No. is not registered.
REGIT ID3 CODE	Registered ID3 code/ min.: 0, max.: FFFFFF*	The ID No. registered in the transmitter ID3 is displayed	*: Displayed only when the ID No. is not registered.
REGIT ID4 CODE	Registered ID4 code/ min.: 0, max.: FFFFFF*	The ID No. registered in the transmitter ID4 is displayed	*: Displayed only when the ID No. is not registered.

(e) Check the ID number on the identified transmitter by removing it from the tire and wheel.

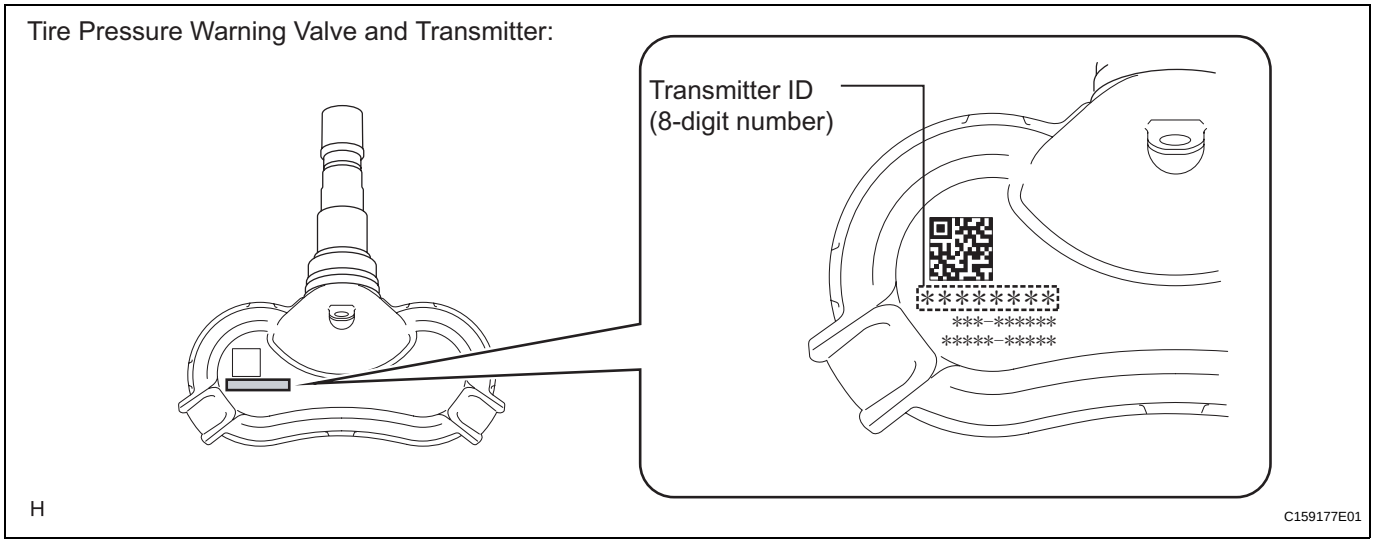

(f) Confirm that the ID number on the transmitter and recorded transmitter ID match.

Result

Result	Proceed to
Match	A
Do not match	B

B → **Go to step 6**

A

5 REPLACE TIRE PRESSURE WARNING VALVE AND TRANSMITTER

(a) Replace the tire pressure warning valve and transmitter (See page TW-84).

NEXT

6 REGISTRATION OF TRANSMITTER ID

(a) Perform registration (See page TW-20).

NEXT

7 PERFORM INITIALIZATION

(a) Perform initialization (See page TW-23).

NEXT

8 READ VALUE ON DATA LIST

(a) Make sure that the ignition switch is off.
(b) Connect the intelligent tester to the DLC3.
(c) Turn the ignition switch to the ON position.

(d) Select "TIREPRESS" by following the prompts displayed on the intelligent tester.

TIRE PRESSURE:

Tester Display	Measurement Item/Range	Normal Condition	Diagnostic Note
TIREPRESS1	ID1 tire inflation pressure (Absolute pressure) / min.: 100 kPa (1 kgf/cm^2, 14 psi) max.: 449.35 kPa (4.5 kgf/cm^2, 63 psi)	Actual tire inflation pressure	If 100 kPa (1 kgf/cm^2, 14 psi) for absolute pressure is displayed, the data has not been received.*
TIREPRESS2	ID2 tire inflation pressure (Absolute pressure) / min.: 100 kPa (1 kgf/cm^2, 14 psi) max.: 449.35 kPa (4.5 kgf/cm^2, 63 psi)	Actual tire inflation pressure	If 100 kPa (1 kgf/cm^2, 14 psi) for absolute pressure is displayed, the data has not been received.*
TIREPRESS3	ID3 tire inflation pressure (Absolute pressure) / min.: 100 kPa (1 kgf/cm^2, 14 psi) max.: 449.35 kPa (4.5 kgf/cm^2, 63 psi)	Actual tire inflation pressure	If 100 kPa (1 kgf/cm^2, 14 psi) for absolute pressure is displayed, the data has not been received.*
TIREPRESS4	ID4 tire inflation pressure (Absolute pressure) / min.: 100 kPa (1 kgf/cm^2, 14 psi) max.: 449.35 kPa (4.5 kgf/cm^2, 63 psi)	Actual tire inflation pressure	If 100 kPa (1 kgf/cm^2, 14 psi) for absolute pressure is displayed, the data has not been received.*

HINT:
*: It may take about 5 to 6 minutes until the values are displayed.

Result

Result	Proceed to
All tire pressure readings are equal to specified values.	**A**
Tire pressure values are not displayed.	**B**

A → **END**

B

9 REPLACE TIRE PRESSURE WARNING ANTENNA AND RECEIVER

(a) Replace the tire pressure warning antenna and receiver (See page TW-81).

NEXT

10 READ VALUE ON DATA LIST

(a) Make sure that the ignition switch is off.
(b) Connect the intelligent tester to the DLC3.
(c) Turn the ignition switch to the ON position.
(d) Select "TIREPRESS" by following the prompts displayed on the intelligent tester.

TIRE PRESSURE:

Tester Display	Measurement Item/Range	Normal Condition	Diagnostic Note
TIREPRESS1	ID1 tire inflation pressure (Absolute pressure) / min.: 100 kPa (1 kgf/cm^2, 14 psi) max.: 449.35 kPa (4.5 kgf/cm^2, 63 psi)	Actual tire inflation pressure	If 100 kPa (1 kgf/cm^2, 14 psi) for absolute pressure is displayed, the data has not been received.*

Tester Display	Measurement Item/Range	Normal Condition	Diagnostic Note
TIREPRESS2	ID2 tire inflation pressure (Absolute pressure) / min.: 100 kPa (1 kgf/cm^2, 14 psi) max.: 449.35 kPa (4.5 kgf/cm^2, 63 psi)	Actual tire inflation pressure	If 100 kPa (1 kgf/cm^2, 14 psi) for absolute pressure is displayed, the data has not been received.*
TIREPRESS3	ID3 tire inflation pressure (Absolute pressure) / min.: 100 kPa (1 kgf/cm^2, 14 psi) max.: 449.35 kPa (4.5 kgf/cm^2, 63 psi)	Actual tire inflation pressure	If 100 kPa (1 kgf/cm^2, 14 psi) for absolute pressure is displayed, the data has not been received.*
TIREPRESS4	ID4 tire inflation pressure (Absolute pressure) / min.: 100 kPa (1 kgf/cm^2, 14 psi) max.: 449.35 kPa (4.5 kgf/cm^2, 63 psi)	Actual tire inflation pressure	If 100 kPa (1 kgf/cm^2, 14 psi) for absolute pressure is displayed, the data has not been received.*

HINT:
*: It may take about 5 to 6 minutes until the values are displayed.

Result

Result	Proceed to
All tire pressure readings are equal to specified values.	**A**
Tire pressure values are not displayed.	**B**

B → **REPLACE TIRE PRESSURE WARNING ECU (See page TW-87)**

A

END