TIRE PRESSURE WARNING RECEIVER (w/ Antenna)

COMPONENTS

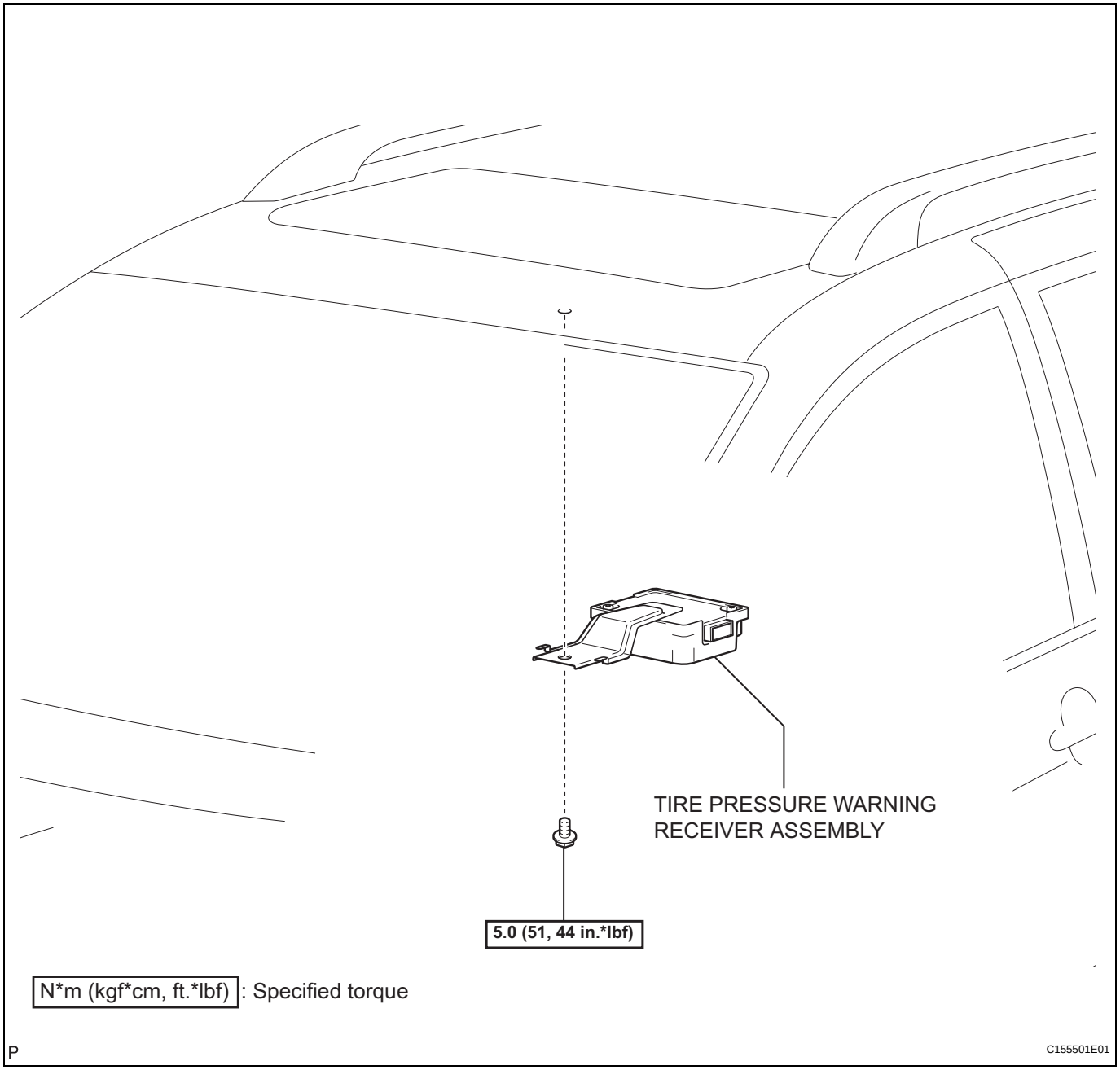

REMOVAL

1. **DISCONNECT CABLE FROM NEGATIVE BATTERY TERMINAL**

2. **REMOVE ROOF HEADLINING ASSEMBLY**
   HINT:
   Refer to the instructions for REMOVAL of the ROOF HEADLINING (See page IR-6).

3. **REMOVE TIRE PRESSURE WARNING RECEIVER ASSEMBLY**
   (a) Remove the bolt.

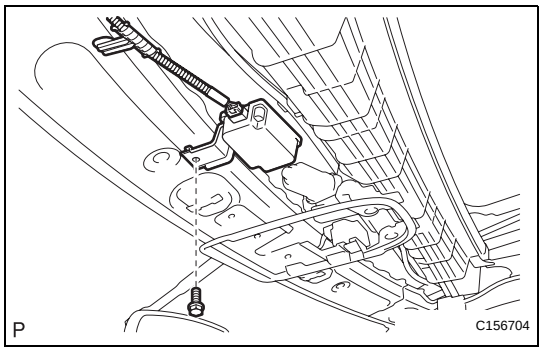

   (b) Disconnect the connector and remove the tire pressure warning receiver assembly.

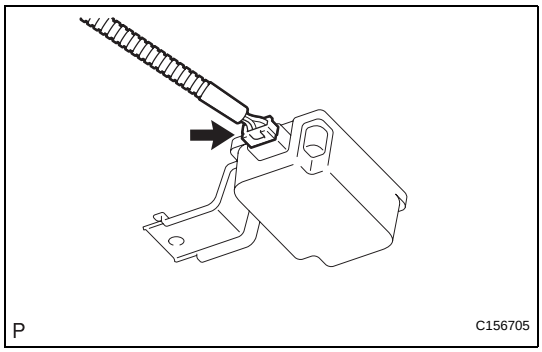

INSTALLATION

1. **INSTALL TIRE PRESSURE WARNING RECEIVER ASSEMBLY**
   (a) Connect the connector.

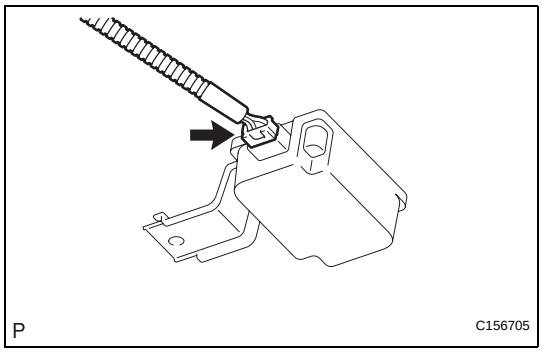

   (b) Install the tire pressure warning receiver assembly with the bolt.
   Torque: 5.0 N*m (51 kgf*cm, 44 in.*lbf)

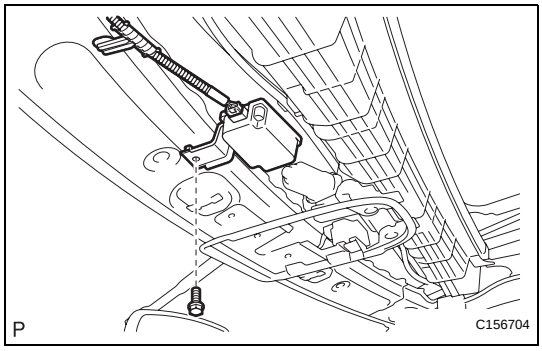

2. **INSTALL ROOF HEADLINING ASSEMBLY**
   HINT:
   Refer to the instructions for INSTALLATION of the ROOF HEADLINING (See page IR-14).

3. **CONNECT CABLE TO NEGATIVE BATTERY TERMINAL**

4. **INSPECT TIRE PRESSURE WARNING SYSTEM**
   HINT:
   See page TW-25.