TIRE PRESSURE WARNING ECU

COMPONENTS

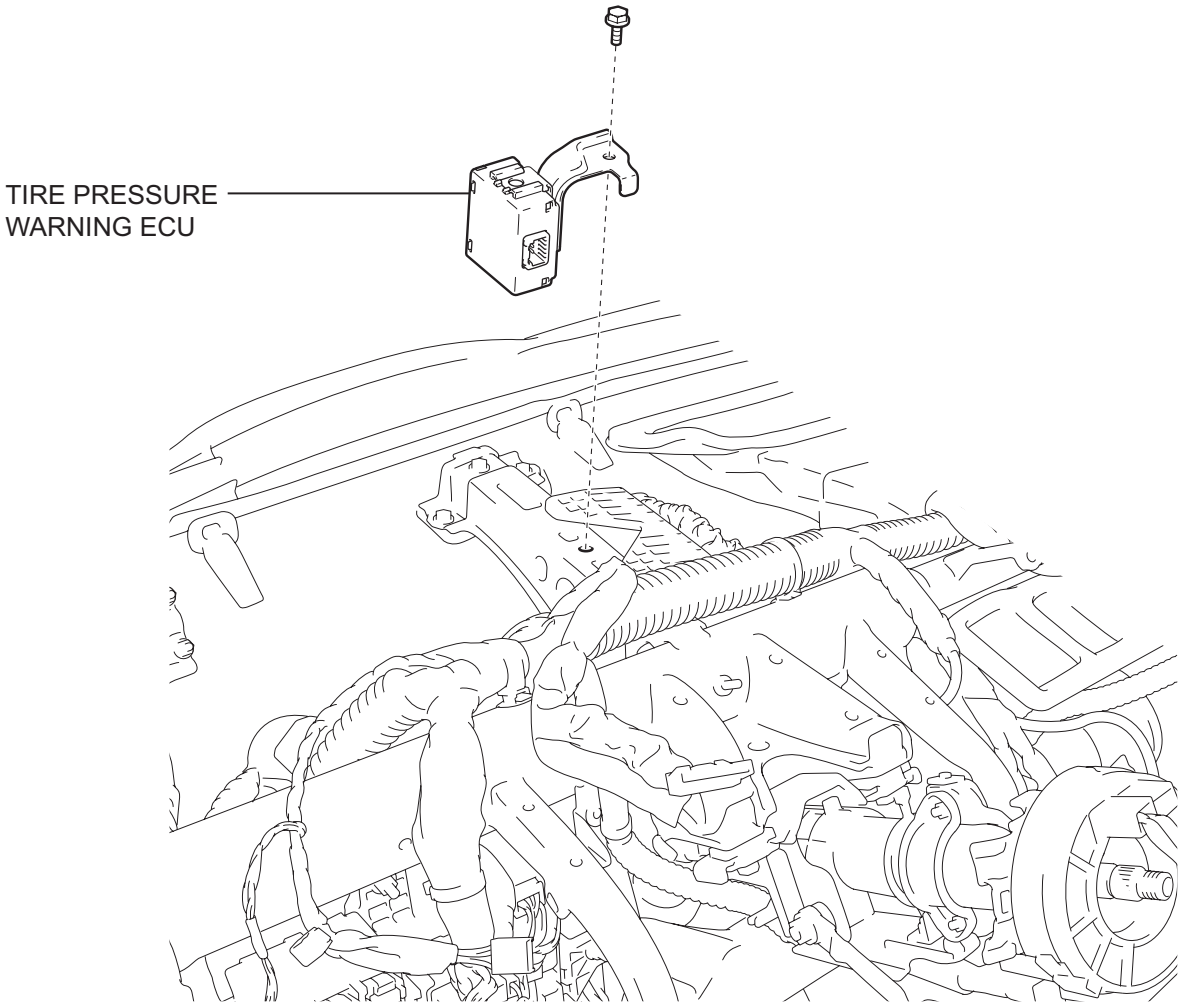

REMOVAL

NOTICE:
Before removing the tire pressure warning ECU, read the registered transmitter IDs of all wheels and write them down to use for re-registration of transmitter IDs (See page TW-20).

1. **DISCONNECT CABLE FROM NEGATIVE BATTERY TERMINAL**
   CAUTION:
   Wait at least 90 seconds after disconnecting the cable from the negative (-) battery terminal to prevent airbag and seat belt pretensioner activation.

2. **REMOVE INSTRUMENT PANEL SAFETY PAD SUB-ASSEMBLY**
   HINT:
   Refer to the instructions for REMOVAL of the instrument panel safety pad (See page IP-5).

3. **REMOVE TIRE PRESSURE WARNING ECU**
   (a) Remove the screw.

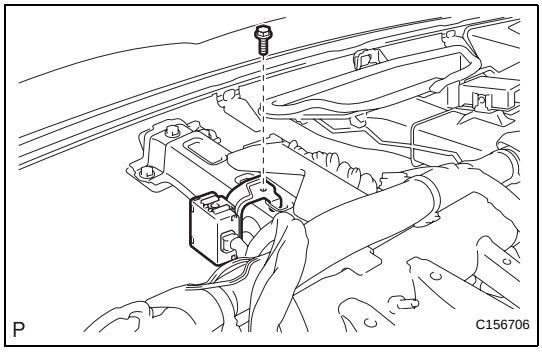

   (b) Disconnect the connector and remove the tire pressure warning ECU.

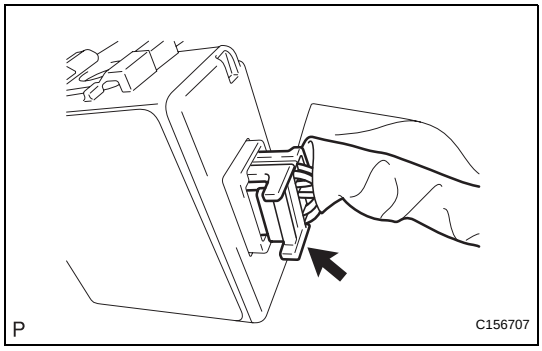

INSTALLATION

1. **INSTALL TIRE PRESSURE WARNING ECU**
   (a) Connect the connector to the tire pressure warning ECU.

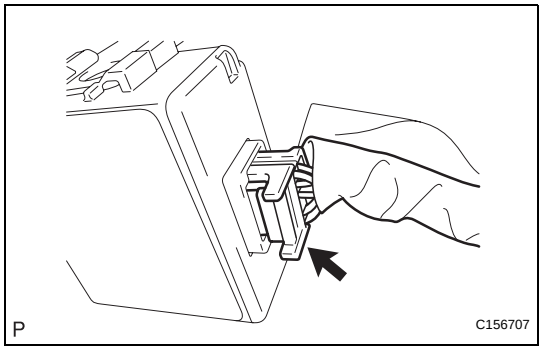

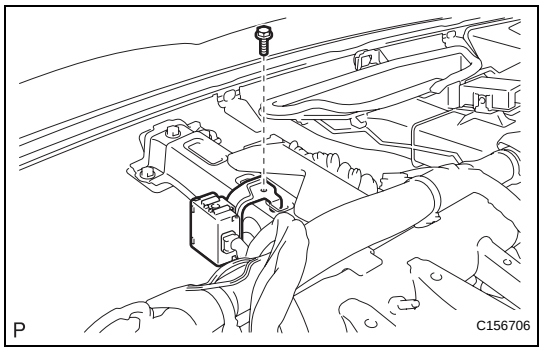

(b) Install the tire pressure warning ECU with the screw.

2. **INSTALL INSTRUMENT PANEL SAFETY PAD SUB-ASSEMBLY**
HINT:
Refer to the instructions for INSTALLATION of the instrument panel safety pad (See page IP-14).

3. **CONNECT CABLE TO BATTERY NEGATIVE TERMINAL**

4. **REGISTER TRANSMITTER ID**
HINT:
See page TW-20.

5. **INSPECT TIRE PRESSURE WARNING SYSTEM**
HINT:
See page TW-25.

6. **INITIALIZE SYSTEM**
NOTICE:
- **Be sure to register the transmitter IDs of all tires in the ECU before initialization.**
- **Be sure to inflate all tires to the proper inflation pressure before initialization.**

HINT:
See page TW-23.