TIRE PRESSURE WARNING RESET SWITCH

COMPONENTS

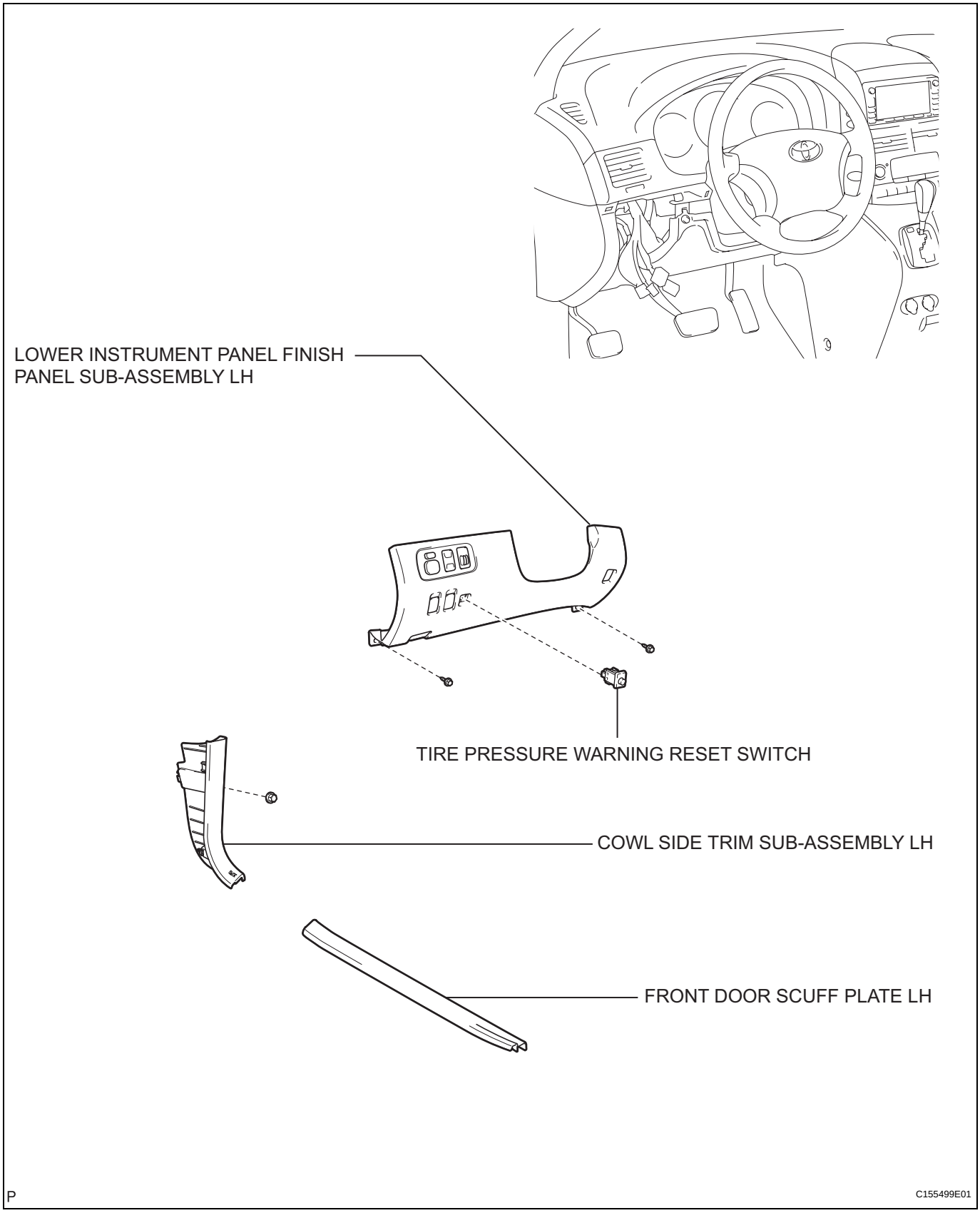

REMOVAL

1. **DISCONNECT CABLE FROM NEGATIVE BATTERY TERMINAL**
2. **REMOVE FRONT DOOR SCUFF PLATE LH**
3. **REMOVE COWL SIDE TRIM SUB-ASSEMBLY LH**
4. **REMOVE LOWER INSTRUMENT PANEL FINISH PANEL SUB-ASSEMBLY LH (See page IP-6)**
5. **REMOVE TIRE PRESSURE WARNING RESET SWITCH**
   (a) Disengage the 2 claws and remove the tire pressure warning reset switch from the lower instrument panel finish panel sub-assembly LH.

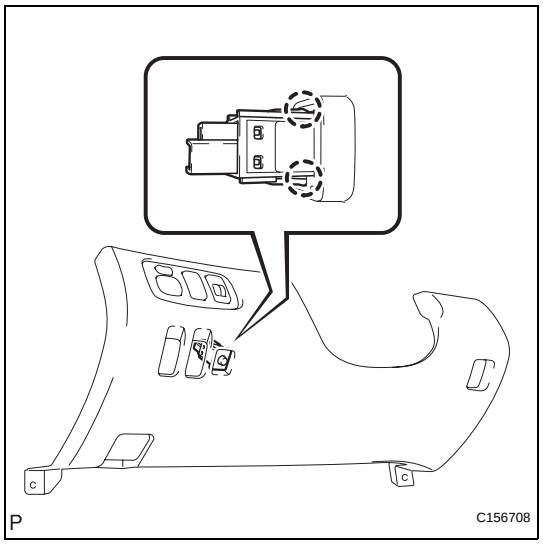

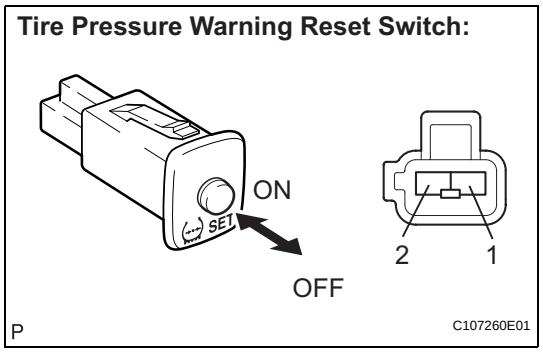

INSPECTION

1. **INSPECT TIRE PRESSURE WARNING RESET SWITCH**
   (a) Remove the tire pressure warning reset switch.
   (b) Measure the resistance between terminals 1 and 2 of the tire pressure warning reset switch when the tire pressure warning switch is ON and OFF.
   Standard resistance

Switch Condition	Specified Condition
ON	Below 1 Ω
OFF	10 kΩ or higher

If the result is not as specified, replace the tire pressure warning reset switch.

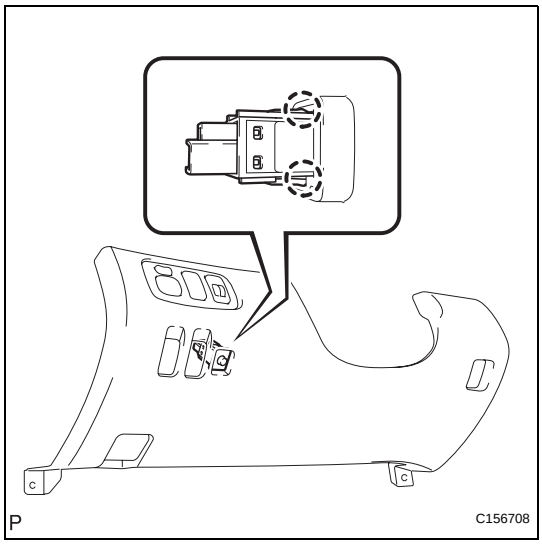

INSTALLATION

1. **INSTALL TIRE PRESSURE WARNING RESET SWITCH**
   (a) Engage the 2 claws to install the tire pressure warning reset switch to the lower instrument panel finish panel sub-assembly LH.
2. **INSTALL LOWER INSTRUMENT PANEL FINISH PANEL SUB-ASSEMBLY LH**
3. **INSTALL COWL SIDE TRIM SUB-ASSEMBLY LH**
4. **INSTALL FRONT DOOR SCUFF PLATE LH**
5. **CONNECT CABLE TO NEGATIVE BATTERY TERMINAL**
6. **INSPECT TIRE PRESSURE WARNING SYSTEM**
   HINT:
   See page TW-25.